AUTHENTICATED
U.S. GOVERNMENT
INFORMATION
GPO

[H.A.S.C. No. 111–171]

MODELING AND SIMULATION: ENHANCING MILITARY READINESS

HEARING

BEFORE THE

SUBCOMMITTEE ON READINESS

OF THE

COMMITTEE ON ARMED SERVICES
HOUSE OF REPRESENTATIVES

ONE HUNDRED ELEVENTH CONGRESS

SECOND SESSION

HEARING HELD
JULY 20, 2010

U.S. GOVERNMENT PRINTING OFFICE

58–291 WASHINGTON : 2010

For sale by the Superintendent of Documents, U.S. Government Printing Office,
http://bookstore.gpo.gov. For more information, contact the GPO Customer Contact Center,
U.S. Government Printing Office. Phone 202–512–1800, or 866–512–1800 (toll-free). E-mail, gpo@custhelp.com.

SUBCOMMITTEE ON READINESS

SOLOMON P. ORTIZ, Texas, *Chairman*

GENE TAYLOR, Mississippi
SILVESTRE REYES, Texas
JIM MARSHALL, Georgia
MADELEINE Z. BORDALLO, Guam
CAROL SHEA-PORTER, New Hampshire
JOE COURTNEY, Connecticut
DAVID LOEBSACK, Iowa
GABRIELLE GIFFORDS, Arizona
GLENN NYE, Virginia
LARRY KISSELL, North Carolina
MARTIN HEINRICH, New Mexico
FRANK M. KRATOVIL, JR., Maryland
BOBBY BRIGHT, Alabama
JOHN GARAMENDI, California
DAN BOREN, Oklahoma
HANK JOHNSON, Georgia

J. RANDY FORBES, Virginia
ROB BISHOP, Utah
MIKE ROGERS, Alabama
TRENT FRANKS, Arizona
K. MICHAEL CONAWAY, Texas
DOUG LAMBORN, Colorado
ROB WITTMAN, Virginia
MARY FALLIN, Oklahoma
JOHN C. FLEMING, Louisiana
FRANK A. LOBIONDO, New Jersey
MICHAEL TURNER, Ohio
CHARLES K. DJOU, Hawaii

VICKIE PLUNKETT, *Professional Staff Member*
LYNN WILLIAMS, *Professional Staff Member*
KATY BLOOMBERG, *Staff Assistant*

CONTENTS

CHRONOLOGICAL LIST OF HEARINGS

2010

	Page
HEARING:	
Tuesday, July 20, 2010, Modeling and Simulation: Enhancing Military Readiness	1
APPENDIX:	
Tuesday, July 20, 2010	33

TUESDAY, JULY 20, 2010

MODELING AND SIMULATION: ENHANCING MILITARY READINESS

STATEMENTS PRESENTED BY MEMBERS OF CONGRESS

Forbes, Hon. J. Randy, a Representative from Virginia, Ranking Member, Subcommittee on Readiness	2
Ortiz, Hon. Solomon P., a Representative from Texas, Chairman, Subcommittee on Readiness	1

WITNESSES

Burke, Vice Adm. William, USN, Deputy Chief of Naval Operations, Fleet Readiness and Logistics (N4)	4
Gibson, Maj. Gen. Marke F., USAF, Director of Operations, Deputy Chief of Staff for Operations, Plans and Requirements, Headquarters U.S. Air Force	7
Layfield, Maj. Gen. Stephen R., USA, Director, Joint Training and Joint Warfighting Center, U.S. Joint Forces Command	5
Lewis, Rear Adm. Fred L., USN (Ret.), President, National Training and Simulation Association	9

APPENDIX

PREPARED STATEMENTS:	
Burke, Vice Adm. William	39
Forbes, Hon. J. Randy	38
Gibson, Maj. Gen. Marke F.	82
Layfield, Maj. Gen. Stephen R.	74
Lewis, Rear Adm. Fred L.	91
Ortiz, Hon. Solomon P.	37
DOCUMENTS SUBMITTED FOR THE RECORD:	
[There were no Documents submitted.]	
WITNESS RESPONSES TO QUESTIONS ASKED DURING THE HEARING:	
Mr. Forbes	103
QUESTIONS SUBMITTED BY MEMBERS POST HEARING:	
Mr. Ortiz	107
Mr. Wittman	115

MODELING AND SIMULATION: ENHANCING MILITARY READINESS

HOUSE OF REPRESENTATIVES,
COMMITTEE ON ARMED SERVICES,
SUBCOMMITTEE ON READINESS,
Washington, DC, Tuesday, July 20, 2010.

The subcommittee met, pursuant to call, at 10:05 a.m., in room 2118, Rayburn House Office Building, Hon. Solomon Ortiz (chairman of the subcommittee) presiding.

OPENING STATEMENT OF HON. SOLOMON P. ORTIZ, A REPRESENTATIVE FROM TEXAS, CHAIRMAN, SUBCOMMITTEE ON READINESS

Mr. ORTIZ. The subcommittee will come to order. Today the Readiness Subcommittee meets to hear testimony on the use of modeling and simulation [M&S] to enhance military readiness.

I want to thank our distinguished witnesses from Department of Defense [DOD] and industry for appearing before the subcommittee today, and thank you so much for joining us this morning.

As co-chairman of the Congressional Modeling and Simulation Caucus, with my good friend Randy Forbes, of Virginia, I am very pleased to have this opportunity to discuss how modeling and simulation can improve training, reduce operation and maintenance costs, and increase the life cycle of weapons systems. Our thanks go to Joint Forces Command for providing the Future Immersive Training Environment simulator so that members would get a firsthand experience with the latest simulation technology.

And I had a chance to look at the weapon and fire, and I just could tell by just—that I am out of shape.

But anyway, the military services have all, to some degree, invested in modeling and simulation to improve training, reduce costs, and improve the accuracy of budgeting and material maintenance projects. The services' efforts vary in complexity and change continuously as technological advances in modeling and simulation provide improved capability shaped to meet Department of Defense needs.

Today we will examine a few of the modeling and simulation tools available to the department as examples of how this technology helps enhance military readiness. These range from the Navy's readiness models, used to determine resourcing requirements, such as flying hours and maintenance activities, to immersive training for ground combat, realistic flight simulation, and network missions operations.

We will also look at how industry responds to the department needs for modeling and simulation capabilities as well as examine

potential downsides to overreliance upon simulated versus real-world training.

And we are very fortunate to have the witnesses that we have today, at this hearing today. We have Vice Admiral William Burke, United States Navy, Deputy Chief of Naval Operations, Fleet Readiness, and Logistics.

Sir, thank you so much.

Major General Stephen R. Layfield, United States Army, director, Joint Training and Joint Warfighting Center, United States Joint Forces Command; and Major General Marke F. Gibson, United States Air Force, director of operations, deputy chief of staff for operations, plans, and requirements, Headquarters United States Air Force; and Rear Admiral Fred L. Lewis, United States Navy, retired, president of Naval Training and Simulation Association.

And at this moment the Chair recognizes the distinguished gentleman from Virginia, Mr. Forbes, my good friend, for any remark that he would like to make.

[The prepared statement of Mr. Ortiz can be found in the Appendix on page 37.]

STATEMENT OF HON. J. RANDY FORBES, A REPRESENTATIVE FROM VIRGINIA, RANKING MEMBER, SUBCOMMITTEE ON READINESS

Mr. FORBES. Thank you. And, Mr. Chairman, I have a written statement that, with your permission, I would like to put in the record, but I would like to just make a few other comments——

Mr. ORTIZ. No objection. So ordered.

[The prepared statement of Mr. Forbes can be found in the Appendix on page 38.]

Mr. FORBES [continuing]. If I could.

I am not sure, when we are up here oftentimes we say this is one of the most important hearings that we will have in Congress, and I don't know that too many people would, perhaps, agree with us if we said that this morning, but I would say this: I think that the topic we are talking about is one of the most important topics that we can be talking about, given the current situation of where we are in the country.

Mr. Chairman, I want to first thank you for co-chairing the Modeling and Simulation Caucus. I want to thank you for holding this hearing.

I want to thank each of our witnesses, because it will be up to us to be able to articulate to all of our colleagues and to Congress the importance of what you are able to give to us as a country. We know the incredible economic value of modeling and simulation that we look at, and we can see that any place we go across the country. We also know, pretty much, the training capacity.

I just don't think we can get to the jointness capability that we need to be as a nation without modeling and simulation. You guys can help bring that to the forefront so that our colleagues understand that.

Secondly, I don't think we can afford to do all the testing that we need to do today without modeling and simulation. That is just beyond our reach.

General, I think you are going to be able to tell us some of the things that we can utilize modeling and simulation for as far as keeping the readiness of our fleet and our aircraft and the stuff that we are going to be utilizing there. But there is a third component that I hope that at some point in time we can have a discussion on, if not today then down the road.

Recently I had a lady that met me in the hall and she gave me an envelope. And she said, "Congressman, will you just read this envelope? I have been trying to get it in somewhere in government, and I can't get it there."

And that night I took the envelope, I opened it, and I read it. Her husband worked for an environmental company and they had a piece of equipment that literally would take oil out of water. It wasn't a theory; it wasn't a prototype they were working on. It was functioning right then in West Virginia. All they needed to do was put it on barges.

When I began to examine it I found out that it was not only that letter but thousands of ideas like that across the country that we just don't have a mechanism in government to handle those kinds of ideas and those kinds of thoughts.

I think we know now, whether it is a hurricane situation like Katrina or an oil spill, one of the things that is very difficult for us as a government is when we are trying to make decisions we oftentimes put a few smart men and women in a room, and we are trying to filter out all of these ideas, concepts that are taking place with people in garages somewhere across the country, laboratories somewhere across the country, and we are not able to do that and process that very well.

So Congressman Scott and I are working on a piece of legislation called the American Response Act that would really take the component that we are working on on interagency cooperation, and where we can really create an opportunity for agencies to talk with each other, which they still can't do the way the military can do, but then overlay that with modeling and simulation so that we will be able to take those thousands of ideas that are coming in and process them through a virtual world so that we can walk in and look 80 days down the road, 90 days down the road, and then come back on day 2, day 3, day 4, and say, "Now we are going to make decisions based on the way the world will look 80, 90 days down the road."

Doesn't matter what administration or where it is. America needs that to be able to respond to the kind of crises we will take in the future.

And you gentlemen have the key to that in what you are doing in modeling and simulation.

And the last thing I will tell you is this: There is always a fear, when we have a hearing like this, there will be people who will say, "Well, I don't want them to think we are going to actually be able to do these things." I remember years ago one of my favorite places for my children to go was Disney World, and about 15 years ago I remember coming out of one of their futuristic displays and looking, and they had people talking to each other and having their pictures on telephones, and I remember looking at that and we were laughing and saying, "I wonder if that will ever happen?"

Today when you look at some of those exhibits they look historic because we have surpassed that.

I know in the early part of the 1960s when we talked about putting men on the moon there were people who said, "You know, that is never going to happen." We had people walk on the moon.

You guys have an opportunity for us to create a world where as policymakers we can walk into the future, we can look around, we can decide if we like it or not, and then we can come back and have more informed decisions, and we have not cost as much money, we haven't cost lives, and we have saved quantities of time. And for that I just thank you for being here. We are looking forward to your testimony.

And then hopefully the chairman and I and this committee can help move this entire industry along to do what we think you can do for our country. So thank you so much for being here.

Mr. Chairman, thank you for holding this hearing.

Mr. ORTIZ. You know, the world has changed a lot and we need to stay ahead of the curve. We need to do that—as the world moves we need to move with it, and there are a lot of changes. We see China; we see other countries moving ahead.

And you probably saw on CNN what they saw—they thought it was a, you know, extra terrestrial, but they think it was a missile being fired. So this is great, what we are doing now.

So now let me—Admiral Burke, please proceed with your testimony, followed by General Layfield, General Gibson, and Admiral Lewis. So whenever you are ready, Admiral, go right ahead, sir.

STATEMENT OF VICE ADM. WILLIAM BURKE, USN, DEPUTY CHIEF OF NAVAL OPERATIONS, FLEET READINESS AND LOGISTICS (N4)

Admiral BURKE. Yes, sir.

Chairman Ortiz, Representative Forbes, distinguished members of the House Armed Services Readiness Subcommittee, it is my honor to appear before you to testify on the Navy readiness models alongside General Layfield, General Gibson, and Admiral Lewis.

Today our Navy remains engaged in supporting operations in Afghanistan, Iraq, and all other combatant commander [COCOM] areas of responsibility. We have over 120 ships deployed, which is more than 40 percent of our fleet, a Global Force for Good on station around the world deterring interaction, keeping sea lanes open for free trade, and, when necessary, projecting power.

Several dozen ships and subs are underway as part of preparations for deployment, and dozens more are in port training and conducting maintenance as they prepare for deployment. Others are in deep maintenance, resetting, and stride. Our Aviation, Special Warfare, and Naval Expeditionary Combat Command assets are going through a similar regimen.

The Combatant Commander demand signal, as managed by the Global Force Management Board process, defines the capability needed to satisfy presence and surge requirements worldwide. The Fleet Response Plan describes the Navy process necessary to maintain, train, sustain, and deploy our forces in response to that demand.

Our readiness models identify the resources necessary to deliver that capability. As a result, I have high confidence in the accuracy of the readiness and maintenance budget submission.

A few years ago we recognized the need to transition from a requirement based heavily on historic norms to a model requirement based on quantitative analysis of force generation and operations parameters. We have four interdependent readiness resourcing models that have been subjected to rigorous verification, validation, and accreditation supported by Johns Hopkins University of Applied Physics Laboratory [APL].

Our models are fully accredited and give us the ability to predict the cost of global operations in a dynamic operating environment. These results form the basis of the Navy's readiness budget submission throughout the programming, budgeting, and execution process.

Navy ships and aircraft are capital-intensive forces that, when properly maintained, are designed to remain in service for decades. Scheduled maintenance of these ships and aircraft and the associated training and certification of our crews between deployments is a key element of the cost to own and operate the fleet. Our readiness models are designed to accurately reflect the cost to own, train, and operate our naval forces.

The readiness models account for each phase of the Fleet Response Plan and are integral to our readiness funding decisions. Readiness is a function of capable forces of sufficient capacity ready for tasking.

The return on investment in our fleet readiness program is measured by our ability to deliver required capabilities in rotational deployments while simultaneously responding to emergent needs of the COCOMs. Our models provide the fidelity necessary to accurately define required resources and predict readiness capacity based on varying financial resource levels.

Thank you for your unwavering support and commitment to our sailors, Navy civilians, and their families, for all you do to make our Navy an effective and enduring global force for good. I look forward to your questions.

[The prepared statement of Admiral Burke can be found in the Appendix on page 39.]

Mr. ORTIZ. Thank you, sir.

Major General Layfield.

STATEMENT OF MAJ. GEN. STEPHEN R. LAYFIELD, USA, DIRECTOR, JOINT TRAINING AND JOINT WARFIGHTING CENTER, U.S. JOINT FORCES COMMAND

General LAYFIELD. Chairman Ortiz, Ranking Member Forbes, other members of the subcommittee, on behalf of General James Mattis, the commander of the United States Joint Forces Command, thank you for allowing me to appear before you today. The preparation and readiness of the men and women of our nation's armed forces is our top priority. Since this task cannot be overstated we want to thank this subcommittee and the United States Congress for all your continued support for our warfighters and their families.

My opening remarks will be short. Therefore, I respectfully ask to submit a more detailed written statement to you for placement in the record and look forward to more detailed questions and answers.

Mr. ORTIZ. No objection. It will be placed in the record.

General LAYFIELD. Thank you, sir.

My testimony will address three areas. First, the key role that modeling and simulation plays as a training enabler: We use modeling and simulation to replicate the equipment that we have and the environment where our joint forces will operate. This replication is called the synthetic training environment, or the synthetic battlespace.

We do this through a federation of models and simulations composed of joint and service systems and softwares that is integrated and distributed by Joint Forces Command. The result: the synthetic battlespace.

A computer-generated model of forces, infrastructure, weapons systems, and physical terrain, when run together, will simulate the real world of challenging scenarios that our warfighters face every day. This synthetic environment supports exercises across all of our combatant commands and delivers specific mission rehearsal exercises in support of our forces in Iraq, Afghanistan, and the Horn of Africa.

Most of these exercises integrate coalition and interagency participation. This synthetic battlespace also supports over 200 service-led exercises by replicating the joint environment inside their scenarios.

Additionally, we are supported by the services—we are supporting the services by assisting in the development of models and simulations for individual training applications which can be used at home stations and at home on the Internet.

The second area that I would like to highlight today is the direct and the indirect cost savings to be gained through the use of modeling and simulation. Modeling and simulation allows us to replicate selected training, conduct it virtually instead of live, thereby reducing overall costs, personnel OPTEMPO [operating tempo], and wear and tear on our expensive equipment.

An example of this with the Navy can be seen when training the Joint and the Fleet Headquarters staffs within their fleet synthetic training program. This staff training, which has traditionally taken place during expensive, full-scale, at-sea exercises, can now be conducted effectively and efficiently pier-side at a significant cost savings.

Another efficient use of modeling and simulation is when the training can be distributed and delivered to the training audience right at home. This saves travel costs, equipment, transportation costs, and affords members—servicemembers—more at-home time with their families. We also use simulations to create complex operating environments which are cost-prohibitive to replicate in a live training venue.

My final point today has to do with the training of our close combat infantry and ground units—specifically the role of immersive training venues enabled by modeling and simulation. Throughout history infantry and ground units have suffered the large majority

of combat casualties. The same is true today in Iraq and Afghanistan.

Research shows that these casualties often occur in the unit's initial firefights. Yet, we have not developed a realistic immersive simulation for ground units to prepare troops for their first engagements with the enemy. The time is now to bring state-of-the-art simulation to infantry and other ground units.

To this end, working with the services, the Office of the Secretary of Defense [OSD], and the Joint Staff, we have delivered a prototype infantry immersive training system to the Marine Corps and the United States Army to expose the realm of the possible for infantry immersive training, and it is yielding positive results. We have a demonstration of this system for your viewing in the atrium—outside in the anteroom.

Additionally, the Deputy Secretary of Defense has budgeted $285 million in fiscal years 2011 to 2015 to the services and the United States Joint Forces Command to support the urgent development of infantry immersive training capabilities through the advancement of close combat infantry immersive training simulations.

In summary, I would like to thank you, Chairman Ortiz, and the members of this committee for the opportunity to discuss United States Joint Forces Command's efforts in the area of modeling and simulation, and I would very much, again, especially like to thank you for your deep support and your sincere commitment to our soldiers, our sailors, our airmen, and Marines, and our civilians in this fight. Thank you very much.

[The prepared statement of General Layfield can be found in the Appendix on page 74.]

Mr. ORTIZ. Thank you, sir.

General Gibson.

STATEMENT OF MAJ. GEN. MARKE F. GIBSON, USAF, DIRECTOR OF OPERATIONS, DEPUTY CHIEF OF STAFF FOR OPERATIONS, PLANS AND REQUIREMENTS, HEADQUARTERS U.S. AIR FORCE

General GIBSON. Yes, sir.

Chairman Ortiz and Taylor, Ranking Members Forbes and Bishop, and other distinguished members of the committee, thank you for this opportunity to address the committee regarding your Air Force's modeling and simulation programs.

Today's Air Force operates in a complex, post-9/11 battlespace that extended the scope of our mission beyond air and space into emerging operating environments, such as cyberspace. The trend towards linking weapons systems across the domains of air, land, sea, and space, creates a challenging need for effective individual and collective training for our warfighters.

Modeling and simulation are powerful tools to expose our forces to the complexities and uncertainties of combat before ever stepping into harm's way. As we look to the future with our fifth generation weapons systems, such as the F–22 and F–35, or in space—or in cyberspace operations, simulation will offer the best, and in many cases the only opportunity to train.

As we continue to operate in a resource-constrained environment we realize we must strike a balance between the cost and capabili-

ties of simulation and of live-fly events. Yet it is clear that maintaining the readiness of today's Air Force requires the flexible, adaptive, and repetitive training capabilities that simulation offers.

We increasingly turn to modeling and simulation to meet the challenge of both efficient and cost-effective training. Our goal is to produce the most effective and proficient warfighters in the shortest amount of time.

Your Air Force has a long history of using simulation, beginning all the way back with the Link Trainer in World War II. Now we utilize simulation systems to conduct operations analysis; weapons systems tests and evaluation; command and control at the tactical, operation, and even strategic levels of command. We are working to build simulation capabilities that can operate across networks to integrate training in all of our core warfighting capabilities with those of our sister services and of our coalition and allied friends.

Today we use simulation to improve training in every type of mission. For over a decade we have championed the use of live, virtual, constructive training technologies to conduct distributed mission operations that connect geographically-separated units into a common operating environment.

Let me take a moment to discuss what we mean by live, virtual, and constructive, or LVC. Live training is what we are all familiar with—actual airmen operating their equipment and aircraft in a real environment.

Virtual training are those same airmen operating in a simulated aircraft in the virtual environment. A basic flight simulator connected to a virtual environment would be one example. Constructive training adds computer-generated inputs to the virtual environment, such as a generated threat that would make you react.

Today's high-fidelity simulators offer tremendous possibilities to present high-threat environments and to rehearse specific mission events, or even entire missions. However, these high-fidelity systems require significant investment to be those effective training tools, and it must be kept in mind that simulation is not really meant to replace live training, but to complement it, and in most cases, to make our live training even more effective.

But in many scenarios simulation is the only way we can adequately train our airmen. For example, space and cyberspace training events rely almost solely on simulation. Furthermore, we have been using theater- and operation-level command and control simulations to train with our sister service components and joint warfighters for decades now, and now simulation has become a key component for training our fifth generation pilots in the F–22 and the F–35.

In conclusion, your Air Force and its combat-ready airmen remain focused on the mission: supporting ongoing operations and ensuring the continued security of our great nation. Modeling and simulation is and will continue to be critical to building and training a proficient and adaptive force.

I thank the committee for its shared commitment to our national defense and for this opportunity to appear before you today.

[The prepared statement of General Gibson can be found in the Appendix on page 82.]

Mr. ORTIZ. Thank you, sir.

Admiral Lewis.

STATEMENT OF REAR ADM. FRED L. LEWIS, USN (RET.), PRESIDENT, NATIONAL TRAINING AND SIMULATION ASSOCIATION

Admiral LEWIS. Mr. Chairman, members of the committee, it is a pleasure for me to appear to before you today to discuss one of America's most exciting and promising enterprises, the modeling and simulation and training industry. I have been the president of the National Training and Simulation Association [NTSA] now for 15 years, and NTSA is this country's premier organization dedicated to furthering the growth and health of this critical national asset.

Let me start by saying that simulation technologies are revolutionizing how we learn. In areas such as disaster response, emergency medicine, cultural interaction, military and law enforcement, advanced surgical procedures, and predictions about complex weather systems, modeling and simulation are enabling us to prepare more quickly, more effectively, and with far greater flexibility than ever before.

Gone are the days when we learned from texts and then plunged headlong into the complexities of dangerous and high-risk real-world situations. Now we train in virtual environments that uncannily replicate those we will face in combat, in terrorist attacks, and in the emergency operating room.

In the last few years we have begun a journey into virtual worlds that don't just promise to blur the distinction between simulation and reality; they will soon actually remove it. The National Training and Simulation Association promotes the growth and use of modeling and simulation technologies through a wide variety of activities, including scholarships, certification programs, sponsorship of extensive research, and annual events such as the recently-concluded Congressional Modeling and Simulation Expo, held in the Rayburn office building, with the close collaboration of the Congressional Modeling and Simulation Caucus, with which we enjoy an active and productive relationship.

Our flagship activity is, of course, the annual Interservice Training Simulation and Education Conference, ITSEC, held annually in the late fall in Orlando, Florida. This event, which, like the industry as a whole, is enjoying healthy growth despite an uncertain overall economy and now attracts well over 500 corporations, government and research organizations from around the United States and from over 60 countries around the globe.

Over 100 research and scientific papers are presented and discussed, making ITSEC not only the world's largest exhibition of modeling and simulation technology, but also the world's most important annual focal point for advancement of these technologies. With over half a million square feet of exhibit space showcasing an amazing panoply of modeling and simulation, ITSEC is truly a phenomenal sight, and as an American I take great pride in seeing this evidence of how vibrant and creative this sector of our economy is and what great promise it holds for the future.

During my time at NTSA I have seen the modeling and simulation industry not only grow exponentially, but undergo rapid and, in some cases, unexpected changed. The explosion in computer

processing power, which began in the last decade and which is continuing unabated, has enabled simulation training to migrate from platform trainers where single individuals interact with single training devices, the so-called "man-machine interface," into a wide variety of immersive virtual environments, including those which link multiple actors into a unified training matrix.

It is becoming clear that in the not-too-distant future we will train with avatars, wholly immersed in a three-dimensional alternative world. Creating such environments is, in fact, the next great technological challenge for our industry, but we are on the way to getting there.

With it, among other precedent-setting applications, we will be able to immerse our warfighters in new and unfamiliar cultures, allowing them to learn by doing, by living in a virtual Afghan village, for example. I don't believe this level of technology will be achieved while we pursue our current objectives in Iraq and Afghanistan, but we will see it in the not-too-far future, and it will play an invaluable role in many critical areas of national importance.

As to today's modeling and simulation industry, I would like to underscore not only that it is important to a wide variety of different domains, but also the flexibility and the agility of our industry to respond to changing requirements based on changes in the threat environment. A good example of that responsiveness was the development in Orlando—the deployment—and deployment to Iraq in six months of a convoy tactics trainer. Our industry had quickly and effectively answered a critical battlefield requirement to train our soldiers and Marines how to react if attacked while en route in a convoy of trucks and/or other vehicles.

My confidence in the modeling and simulation industry's technological capabilities is unshakeable, and based on the solid evidence of creativity and innovation that I have attempted to briefly outline today. Against this promising background, however, we face two challenges that each, in very different ways, threaten to hinder what otherwise would be further dramatic progress.

The first is a bureaucratic obstacle that can be removed; I am convinced, with concentrated action by all interested parties. Specifically, the Economic Classification Policy Committee of the Office of Management and Budget has rejected for the third time in eight years our applications for granting unique industrial classification codes for modeling and simulation. As we have stated in our request, granting such stature would not only bestow deserved formal status and recognition of our industry, but would also greatly facilitate tracking of economic data pertaining to modeling and simulation, which at present is an elusive goal.

While we have some economic data for certain geographic areas where the simulation industry enjoys a pervasive presence—for example, in Orlando, Florida, or in the Hampton Roads area of Virginia—we have no unified picture of the industry's overall contribution to the health of the American economy, although we know intuitively that it is considerable and growing rapidly. We intend to vigorously challenge this ruling and call on those with an interest in furthering the growth of the modeling and simulation community of practice to join us in that activity.

The second challenge facing our industry is of a more fundamental nature. For a number of years alarm bells have been alerting us to the widening gap between the United States and most other developed countries in the science and technology skills of our young citizens. Studies equating our achievement levels to those of some less-developed countries and indicating that we have made no improvements in our standings in the—around the globe since 1990 have begun to focus public and private organizations upon the urgent need to rekindle student interest in the hard sciences and to strengthen technology teaching in the classroom.

But raising awareness of the seriousness of our shortcomings may prove the easier task. Ahead of us lies the challenge of creating a sense of excitement and enthusiasm among our youth about the promise that technology and its opportunities offer for a lifetime of achievement and personal reward, just as demanding as the need to provide enhanced instruction and a clear, viable path for classrooms to careers.

President Kennedy's challenge to reach the moon by the end of the 1960s motivated several generations of Americans to great achievement in science and engineering. What we now need in the 21st century is a similar challenge, and I believe that modeling and simulation can be a key to that excitement.

Perhaps no other industry is more dependent on a reliable supply of first-class scientists and engineers than the modeling and simulation community. At the same time, modeling and simulation enjoys a built-in advantage in that young people have surrounded themselves with variations of simulation technology. Video games in particular are a type of virtual simulation, and in fact, serious games based on video game technology are an increasingly important component of the overall simulation training picture.

But even with that kind of stimulation of the younger generation our downward trend continues. We at NTSA have engaged in several efforts to try to reverse the trend, and while worthwhile and successful, they are only fractural and affect only the margins.

We must do more to enhance science, technology, engineering, and mathematics education—STEM education—across the nation. If we do not then we will continue to see our American leadership in technology erode as other nations eagerly assume the leadership position previously held by us.

There are challenges ahead for my community, but in the exciting and dynamic world of modeling and simulation the way ahead is lit with the promise of being able to address our nation's most vexing problems.

Sir, I thank you for this opportunity to appear before you today, and I look forward to your questions.

[The prepared statement of Admiral Lewis can be found in the Appendix on page 91.]

Mr. ORTIZ. Thank you so much.

We have had some very good testimony this morning. And I am going to ask the—all the panel here a question, and maybe each one of you can try to answer the best that you can.

In your opinion, what is the proper balance between the use of simulated training and real-world or live training, and what criteria are used to evaluate to achieve that balance? And of course,

if I understand correctly, the equipment that I saw back here is being—is not being used now; it is a prototype. I mean, once you do that if you can give me a description—do you get used to either one of the live training or the simulated training? Maybe you can help me understand some of this.

General LAYFIELD. Thank you, sir. I will take the first stab at that question.

Without question a balance of all the venues of training, live or simulated, is a key component of the total force readiness. All of our services apply great rigor to finding that balance and making sure that we have the most effective mix of combination of training venues.

Outside you are watching what is a modeling and simulation venue. It is not intended to replace live at all; it is intended to enhance live training and to enhance the readiness of that small unit that has experienced that—experiencing that venue.

Mr. ORTIZ. Anybody else like to give it a try?

General GIBSON. Congressman Ortiz, I think in each scenario there are several variables that one would have to consider, given my experience in aviation, especially in the air side. One is the type of mission that you are trying to replicate, and then offsetting that with the ability both of the simulation and the investment and whether you can achieve a high-fidelity simulator that will do a good job of replicating that live flying activity, or command and control activity, or whatever it is you are trying to pursue.

Where we have seen that sometimes begin to drift is requiring that simulator or simulation to continue to keep a pace of the aircraft upgrades and things of that nature. As soon as those two begin to break apart you encounter what we call "negative training." In other words, the pilots and the operators know what it is like in the actual aircraft and if they go so something that doesn't accurately replicate that it becomes problematic. So there is an investment aspect to this and a technology aspect of keeping those two joined very closely.

In the end, I think each system has its own balance. Based on that and the scenario and what you are trying to do I think simulation is fantastic in its ability to stop and start again from an instructional value. You don't have to waste an entire sortie or mission to come back and talk about what happened; you have the ability to interrupt and instruct and correct right then and there, while it is effective.

But in the end, certainly some of the live flying or live activity has to take place because ultimately that is where the confidence is built in that system before you have to employ it for real.

Admiral BURKE. Mr. Chairman, I think I would agree with what has been said up until this point. I think there is—when you think about simulation there are essentially three things that occur. You can fully simulate some of the things that you are required to do and you can get full credit, if you will, for that simulation.

There are other things that you can simulate that you may want to do in the actual platform. But you can get to a level of proficiency faster by doing the simulator, and more cheaply.

And then there are certain things that the simulators just don't lend themselves to yet at this point, and those are some of the

more complex evolutions. You know, we haven't figured out how to fully simulate a ship yet, or multiple aircraft flying together—you know, flying close to one another. That has got a pucker factor in the real world that you may not get in the simulator.

We also need to recognize that the simulators are growing in capability every year, so what was—what we weren't able to do last year we might be able to do this year. So as we improve the fidelity of those simulators we can do more in them.

And then the last thing I would like to say is—to follow on what Marke said—is the—it is critical that we upgrade the simulators. Now, I am a submariner, and the way we have done this in my career is we bought the simulator up front and we made a commitment to upgrade the software when we upgraded the ship, so what that allowed us to do was continue to train on that simulator and not get that negative training that the general mentioned. However, that is a challenge because we are taking away money from something else to upgrade those.

Admiral LEWIS. Mr. Chairman, just let me add one final comment or thought to what you have heard from the—my distinguished colleagues here, and that is that the mix and the balance depends on the scenario, depends on the piece of equipment that you are trying to train an individual on.

The classic example, of course, is the Apollo program, and for the air crew, or the astronauts who operated a lunar module. They only had an opportunity to train in a simulator before they actually did the real evolution, so that is kind of one end of the spectrum.

At the other end of the spectrum is the more routine kinds of scenarios, situations, operations that you might have to engage in when you are operating that piece of equipment—an airplane, a ship, or a submarine—you can easily train people on simulators in that regard.

So the Gordian's Knot of training and simulation is the question that you just asked, and that is, "What is the balance?" It depends on the equipment; it depends on the risk involved in operating that piece of equipment and the kind of environment in which you are going to operate; it also depends on the requirements that each individual service and the joint community has for operation of that equipment and those units who are employing those equipments.

Mr. ORTIZ. I am just going to ask one short question before I pass it to my good friend, Mr. Forbes.

The candidates, the crew that utilize the simulators—do you have some of them who might have a problem adapting or learning? Do they fail, or are most of the people that use it—most of the crew members, or the soldiers, or sailors, or Marines that use it—do they all pass with flying colors or do you have problems with them?

Admiral LEWIS. Mr. Chairman, can I give a non-military example of—in response to your question? And that is the—you know, simulation is used not only in the military case, but also there are hundreds of applications for utilizing simulators in the private sector, one of which is in the health care field.

So one classic simulation in the scenario equipment that is being used in medical schools around the country and hospitals around the country are the operating room environment, which can be sim-

ulated with a simulated patient. So the operating team can come in, do the procedure, the mannequin is hooked up to life-cycle, life signs monitoring equipment and so forth, and they can, you know, apply the medications that are required for a specific case, and if they are successful the mannequin survives, and if they are unsuccessful then the mannequin dies. But better on the mannequin than on you or me, I say.

But the beauty of it all is that they can step back away from that and the whole scenario can be replayed with the participants observing what had transpired during the execution of the procedures that they had just used to try to assist that patient. So it is—not necessarily do they—once they go through the procedure do they get an upcheck. If they fail they can fall back and relearn, so that is the beauty of the simulated environment.

Mr. ORTIZ. The reason I ask is because in war you die one time; in politics you die many times.

Mr. Forbes.

Mr. FORBES. Thank you, Mr. Chairman.

And thank all of you, gentlemen, for your expertise and being here today, and I will try to ask each one of you a question and then pass it on to my colleagues, and maybe come back if we have additional time.

But, Admiral Burke, if I could start with you just because of where you are on the podium there—we know that some recent studies have at least placed into question some of the Navy's readiness modeling and financial—don't want to address that now, but my question for you is this: How do you feel the current financial models used by the Department of Defense compare to corporate America? Specifically, do you believe they rival the corporate models in sophistication and accuracy or do you believe that there may be room to improve upon these models?

And I know all of you were being brief in your testimony, but I read your written testimony and one of the statements that you mention in there, it says, "All models meet an industry standard of less than 5 percent error acceptance level." What industry are we comparing that to for that?

Admiral BURKE. Thanks for the question, sir. I think, first of all, we go through a rigorous verification, validation, and accreditation process, and that—we have a team within the Navy staff that works in the model area and does this, but also we get help from outside folks—Johns Hopkins APL. And Johns Hopkins is in the business of—or, they have a team that is in the business of doing this across industry.

And so the standard is essentially that your assumptions are well-documented, the model results are stable, and there is a correlation between the input and the output. And the standard is five—less than 5 percent.

Now, as far as what DOD is doing to do their modeling, I am not specifically sure——

Mr. FORBES. Address the Navy, then, if you would like.

Admiral BURKE. Yes, sir. But in the case of the Navy, essentially what we are doing is taking a complex set of inputs and putting that input into databases and spreadsheets to relate that to a cost output. So if you want to say—if you want to take the fleet readi-

ness program and say, "Here is what we need," then we can easily relate that to cost.

Am I getting near what you are looking for or am I missing your——

Mr. FORBES. You are, and let me try one more stab at it, because one, I appreciate what you are doing and we truly are—we are here trying to help jointly and cooperatively getting to the goal that we want. One of the things in this subcommittee and in our full committee that I know the chairman is constantly grappling with is, we have proposals that come to us where we are given option A, but it is very difficult for us to say if we pick option A that means we take B, C, and D off the board, and we are constantly trying to get our arms around that so that we can ask those questions so we are intelligently making decisions that help the defense of the country.

And sometimes we can get all the accreditations in the world, all the check-offs in the world, but if they are not answering the questions or they are not reaching the goals and we are still off it hasn't done us much good. So my question—not critical at all, it is simply groping for, forgetting the accreditations and the check-offs that we all do so that we kind of protect ourselves in saying we have done everything we needed to do—in your experience, when you compare what we are doing with the Navy or the Department of Defense how do they stack up in comparison to the models that the private sector is using?

Are they reaching as good of results? Are they as predictive? And secondly, when we say they have got to be within five percent of the industry, what industry are we basing that on?

Admiral BURKE. Sir, let me take the last part first. The five percent is we look at what the model predicted versus what actually occurred, so we go back and look at that. So that is how you get to the five percent. The five percent is the industry standard for full accreditation of the model. We just happen——

Mr. FORBES. Okay.

Admiral BURKE [continuing]. So both of those come together.

Mr. FORBES. Okay.

Admiral BURKE. Now, what we used to do is we used to say, "What did we do last year," so that is probably good enough for this year. I don't know that there is a—I don't know that we—there is an industry that would compare to what we do and I don't know that we have tried to do that, but I will go back and look at that and figure out how we would compare ourselves to industry, sir.

Mr. FORBES. And then, Admiral, any suggestions you have about what we can do to help you do that we would really appreciate as a committee, because we want to do that.

Admiral BURKE. Yes, sir.

Mr. FORBES. General Layfield, Chairman asked a very good question about balance between live and virtual training, but General Mattis has been a leader in this area. It is a crucial speech I heard him give about the amount of lives that we can save for people in the infantry, because as I recall his speech, which I heard him deliver, he mentioned the fact that the infantry was taking the brunt of the casualties and that if he could narrow that learning curve

down months that he could save a number of lives and he felt that modeling and simulation was the key to narrowing that down.

If I have misstated that in any way please correct me, but if that is close to accurate would you tell us and explain the essence of what he was saying and how we might be able to do more with modeling and simulation to save those lives in the field?

General LAYFIELD. Congressman, that is very clear, and I agree with you completely with General Mattis' comments and the intent of the message he was trying to portray, which is one of our keen focuses at Joint Forces Command, is to try and build an exercise regime, a scenario, an immersive venue for all of our warfighters so that their very first fight is really no worse than their last practice, their last rehearsal. Using modeling and simulations is a great way to enable that.

Out here in the anteroom we have a demonstration of the exact same thing. On that video—and this is a quote; I would like to read it to you to bring home the point of how valuable bringing home an immersive environment to the ground unit, specifically our great Marines right now and our great Army and all of our ground forces to help them actually get through that first firefight and make it really be no worse than their last practice.

And this is a quote from Sergeant Jose McFadden, from the 29th Infantry, out of Virginia, and recently back from theater, and he said when he tried on this equipment, "I got caught up in the heat of the moment a lot of the time," referring to his experience in the machine there. "It certainly felt like I was back in theater."

Now, that is what we are after. We are after an immersion simulation capability that allows our great military to experience combat and all the stresses of that before they have to actually do it.

So thank you, Congressman.

Mr. FORBES. And, General, again, if I am understanding General Mattis, we have a disproportionate number of casualties that take place in that initial deployment situation when that training is not where we would like for it to be, let's say. By reducing that down General Mattis believes that we can save a number of lives and a number of casualties, and feels that modeling simulation and the immersion training that you are talking about could be a major assistance in doing that. Is that a fair statement?

General LAYFIELD. Yes, Congressman, that is fair.

Mr. FORBES. Good.

General Gibson, one of the things that we know that you mentioned is that we can get there faster and cheaper with modeling and simulation, but one of the other things that I was really looking for is, how are we using modeling and simulation for structural models? I mean, I know we had a concern with our F–15s not too long ago, the cracks on the longerons. When we first built those planes we didn't have modeling and simulation like we have today.

Do we have adequate structural models for, like the F–22, the F–35? And secondly, how can we use modeling and simulation to go back on some of our legacy systems and really extrapolate and look and predict models that—or problems that could be caused by the OPTEMPO that we have put some of those units through?

General GIBSON. Yes, sir. I wouldn't say that modeling and simulation is my core competency, but by serendipity I was at the Fort

Worth plant for the F–35 last week on a visit—the simulator—and I know that they use modeling of their structures extensively there to make predictions. Obviously that aircraft is built for all the services and will be exposed to a number of environments, and they walked me through that process. And in fact, that is being borne out in many of their follow-on flight evals.

As far as going back to previous aircraft, I am not familiar with a lot of that. I know that there is great interest because we have flown a number of our—what we would call major combat operations—MCO—aircraft in this counterinsurgency fight and used up a lot of flying hours and a lot of flying time, and we are still somewhat uncertain on what that is—what toll that is taking on those air frames.

I saw some analysis the other day about—on the A–10s specifically, how much did we think we are consuming them, essentially, over the predicted rate that we had before. So I can take that for the record, Congressman. I don't have the specifics with me but I know there is a concern to go——

Mr. FORBES. If you would just please get us back that information, because we want to help you with that. That could be a huge benefit for us to do.

General GIBSON. Yes, sir.

[The information referred to can be found in the Appendix on page 103.]

Mr. FORBES. Last thing: General Lewis, take us into tomorrow land. What can modeling and simulation do for us? Because you are where the rubber meets the road on both the policy aspect and also what is out there, but show us tomorrow. If we are smart enough to be able to use modeling and simulation how could it help us in dealing with emergency situations? How can it take these ideas people have across America?

And then also, what kind of magnet is modeling and simulation to encourage people to go into math and science, which is one of the big concerns that you mentioned?

Admiral LEWIS. Thank you, Congressman. I alluded to a bit of what the future might look like in my testimony—earlier testimony—but to amplify just a little bit, Congressman Ortiz mentioned the fact about the picture—or I am sorry; that was you, sir—talked about the phones with the photographs and the pictures, and so forth. It wasn't too long ago when there was a television series called Star Trek, starred Leonard Nimoy, Dr. Spock, and that whole crew. And if you will recall, when they are on another world they reach into their pockets and they flip out a little device and click it open, and that was their communicator to talk to the Starship Enterprise.

Well, that was really quite something back then to imagine a world wherein you could be able to talk to somebody that quickly and that easily, and then what do we have today, probably each one of us in our pockets? Our BlackBerry, or our cell phones, or whatever.

Another piece of Star Trek of the time—and this is, again, something I alluded to in my remarks—another piece of that particular—that show—and those people who wrote that script were true visionaries, absolutely incredible. But a part of the Starship

Enterprise—one space, one compartment on that ship—was called the Holodeck, and the Holodeck was a space that was empty to someone who just happened to walk by it, but once you entered it and the doors closed and you would say, computer, take me to whatever place in the world, or whatever planet, or whatever time that you wanted to be inserted, and suddenly that whole environment would appear.

Now, just imagine what you have out here in the anteroom or we have seen demonstrated elsewhere, wherein you see a different world through glasses, through goggles, through something you put over your eyes, and this imaginary world is portrayed for you, and you operate in that environment, submersive kind of training that we are talking about, and we are about ready to really march forward with that in the M&S industry.

It is not too much of a stretch to think that if you have that world here right now, just in goggles and glasses, before your eyes to take it out a few feet ahead of you, around you, to surround you in that virtual environment. Not too stretch of the imagination to think that that can happen. And I would say that I have heard estimates that we would have that kind of a capability not soon, but in certainly the next 25 or 30, 35 years, we would have the ability to totally immerse an individual in a virtual environment, in a virtual world, surrounded by avatars and operating in a place wherever you might think you would like to be and whatever kind of condition or threat environment that is there for you.

In terms of communicating that kind of a message, that excitement—and I hope a little bit of my excitement about this technology has come through in my remarks, because I am very excited about the opportunities that are ahead for us—but I personally want to try to communicate that excitement to the young people in our country, to the youngsters, the children in grade school, and middle school, and high school, to excite them about the opportunities ahead if they would become interested in math, and science, and engineering, and pursue careers in those fields.

We see that happen, to some extent, at the big event that we have at the end of each year down at ITSEC, where we invite students from all over the Central Florida region, we invite teachers from all over the country to come to visit us to—science teachers, math teachers—to visit us to see the kinds of technology that we have displayed on the floor and the kinds of bells and whistles that they are able to experience firsthand.

The interesting thing about the technology that we operate in on a day-to-day basis is that it changes. It is dynamic; it improves; it gets better every single day, every single year. As I reflect on my time at ITSEC and in this community I have seen the change from almost a 90 to 100 percent focus on very high-end simulators for aircraft, and training air crew, and so forth, but over time—over the last 10 or 15 years—we have seen that change based on the threat—the environment in which our forces, our troops are operating and where we are around the globe.

It changes, it evolves, it shifts in a particular direction. We are in the direction now of we have gone from the convoy tactics training that I talked about to the Humvee [High Mobility Multipurpose

Wheeled Vehicle] upset trainer that has been developed for our troops, and now we are moving into the immersive piece.

And the technology is maturing, it is getting better, and we will be able to answer the kinds of challenge that senior leaders like General Mattis have set out for our industry. The people are there; the creativity is there; and the motivation is there to address those kinds of problems.

Mr. FORBES. Admiral, thank you.

Thank all of—and, Mr. Chairman, just as I yield back the balance of my time, we will go there. The question is whether we get there first or we get there second.

And just to lay out the importance of what you all are doing, one of the experts that I know that speaks on modeling and simulation around the world, whenever he goes to any country, including the United States, he will have an average of about 200, 250 people that show up to listen to him talk. When he went to China to speak he had 5,000 engineers that showed up to listen to him and he said they were asking cutting edge questions, working on cutting edge technologies.

We cannot afford to be second. We have got to be first.

And, Mr. Chairman, thank you for leading the charge on this, and I yield back the balance of my time.

Mr. ORTIZ. Thank you so much.

We have several members here and we will try to stick to the 5-minute rule so that everybody—and if necessary, we will have a second round.

Mr. Heinrich.

Mr. HEINRICH. Thank you very much, Mr. Chairman.

And thank all of you for joining us today. I am lucky enough to have the Air Force's Distributed Mission Operations Center in my district, which I didn't know a great deal about before I was elected to Congress. I actually used to work on Kirtland Air Force Base. I am a mechanical engineer by training. But I was pretty amazed when I saw what they are doing out there.

And it speaks to some of what you were talking about about pulling people together to work in a virtual environment at the same time. And I pulled up a little article on their Virtual Flag exercises, where—one of which included 617 warfighters in—working together in a virtual battlespace at the same time across a couple dozen weapons systems, 61 different distributed units, and I think that that is one of the things, as we move forward, that we need to understand and plan for, is how do we make sure that the various different simulation platforms don't work just in isolation of themselves, but work together so that we can have these more complex simulations as we move forward, where numerous different people—you know, one—people on the ground, to somebody flying an HH–60, to somebody in a tanker, to a CV–22, all can sort of participate in a battlespace exercise together.

How are we planning to make sure that as we move forward we plan ahead of time to make sure that those pieces can talk to each other and work together in a simulated battlespace?

General GIBSON. Sir, I will take that one quickly. You are right: The Virtual Flag exercise intended to complement the former fairly famous Red Flag exercise, Green Flags, and others that were live-

fly events for training—now we try to accomplish most of those training events in a virtual environment and it helps us not only in those systems but to achieve what we call cross-domain integration, now we bring space, and cyber, and the other domains in and learn a little bit more about those relationships.

To your question specifically, we continue to be challenged on making sure that everybody can "plug into the network." There are two—really kind of three dimensions of that. One is that system has to be able to come on to the network. That system, as you acquire that, very rapidly then becomes dated, where the DMO [Distributed Missions Operations] network software and connectivity moves ahead.

We are already—I, again, mentioned I talked—was at Fort Worth last week. I talked to them yesterday about the F–35 simulator and its ability because we had some challenges with the F–22 and its ability to plug into the DMOC [Distributed Missions Operations Center] or the DTOC [Distributed Training Operations Center] that the reserve component runs.

The second piece of that, though, besides U.S. with U.S. as you begin to plug in this network, and it is even more critical these days as we use most of our fifth generation capability to train there, is, frankly, security and how you have multiple levels of security and be able to operate in that environment, that you are—you know, everybody on the network can see what everybody else has and how you train in that coalition environment.

So that is kind of the—that is the last plug, that you want to be able to operate in a joint environment with our sister services—obviously that is the way we are going to fight—but also, then, as we bring in other members. And the F–35, as you know, is an international system, so how we are going to be able to do that in a multilevel security and make sure that we are able to protect those capabilities that we have.

So it is the timeliness of what you buy that day and quickly begins to expire, and then also as you move out into the out years and capabilities are added, how those are brought onboard in a multilevel security concern. But we are aware of them, Congressman, and we try to work those very hard.

Mr. HEINRICH. Mr. Chairman, I will yield back.

Mr. ORTIZ. Mr. Franks.

Mr. FRANKS. Well, thank you, Mr. Chairman.

And thank all of you for being here. This is a critically important subject. You know, I remember a quote that said something along the lines that in times of crisis we do not often rise to meet the occasion; we default to our level of preparation. And it seems like this is especially apropos to the whole subject today.

And I really appreciate all of you, because if you do a good job, of course it makes our soldiers not only the most lethal but the most protected and safe on the battlefield, and it is always wonderful when you can have challenges or problems in the laboratory, as it were—in the environment where no one is getting hurt—than it is to actually have to learn those lessons on the battlefield.

So I know that all of you know that this committee wants, as much as anything, to try to make sure that when our soldiers do have to go into theater that as many of them come home as safely

as possible. And with that in mind I want to take a question up that our Ranking Member Forbes put forth, and that was having to do with our infantry.

I know, General Layfield, that is always the most difficult situation when you have new infantry going into the field and don't have some of the battlefield awareness that some of the overheads might have there, that that is always an especially challenging environment. So I guess my first question to you is, how far off are we from having a state-of-the-art immersive infantry ground simulation system, and is the $285 million over the fiscal years 2011 to 2015—is that enough to field such a system?

General LAYFIELD. Let me take your first question first, Congressman. I agree with you that—completely—like was stated earlier, that we have to do all we can. The time is now to take an immersive venue to the ground fight.

We are partnered heavily with our services, particularly very heavily with the United States Marine Corps, those great Marine fighters, and our United States Army ground soldiers out there, and all elements that are on the ground, to do just that, to make sure that they can survive and be successful in that very first firefight and not have to learn it on the fly. That is precisely what it is all about, sir, so I agree with you completely on that analogy.

The requirements associated with that and how fast we can achieve that end are constantly under review. As we dialogue with the services, and work with them, and support their efforts in this venue, we definitely assess our requirements and we submit them to the Office of the Secretary of Defense, and those requirements are being met. We have adequate resources to pursue that, but I have to caveat that technology is advancing rapidly and we have to stay with the technology advances if not ahead of it. Thank you.

Mr. FRANKS. Mr. Chairman, I read just recently where China now has surpassed the United States in the use of energy. You know, oftentimes there is a debate in this country as to, you know, this country uses too much energy per capita, but they forget that we produce more per capita per the amount of energy we use than just about anyone in the world. But it does seem to me a telling situation that the nation of China is now using more energy than we are, and that seems to translate into some of the discussion that we are having today, that China is going to rapidly advance in these areas.

So, Vice Admiral Burke, my next question is for you. In light of the accreditation of the air crew model of 2008 and in the ship operations one in 2009, have you noticed—you know, one of the things that would help us so much in this committee—I wish there were more people here—but if we had hard evidence, hard research showing that when these young soldiers have gone through systems—simulation systems—that they come home in higher numbers, that they do better on the battlefield. Do you have any data that would show some appreciable improvement—readiness and effectiveness in those two areas, and in the lower casualty rates?

Admiral BURKE. Sir, in the readiness models essentially what we are doing is taking readiness requirements and translating that to cost. It sounds simple; it is pretty complex. But what we have been able to do with that is you can see where there may be growth in

certain areas, and we have been able to get into those areas and look at them, as far as why is there growth, and maybe tamp that down, if possible.

As far as our simulation efforts, I can't really say that we have figured out that we have saved people's lives in the ships and aircraft, although I have to believe that the pilots that fly the aircrafts—or, fly the aircraft—and the ship operators are far better than they would be without them. Fortunately, we have not had a lot of attacks against our aircraft or against our ships to know whether that is true.

Mr. FRANKS. Mr. Chairman, I am going to yield back, but I hope that we can move forward, especially in this whole immersive infantry simulation, because it seems to me like that we could perhaps even gain some data that we could show the rest of the world that would be compelling.

Thank you all very much.

Mr. ORTIZ. Mr. Marshall.

Mr. MARSHALL. Thank you, Mr. Chairman.

Admiral Lewis, when you were commenting about Star Trek and describing, you know, the future that was predicted back then and exists now I found myself thinking the one thing I really want to be able to say from time to time is, "Beam me up, Scotty," and so if you can just sort of hurry things along so that people like me are in a position to say, "Beam me up, Scotty," and actually get out of the circumstances that we are in real quickly I would appreciate it.

I wholeheartedly agree with what the chairman has said, Mr. Forbes has said. Research and development has been a critically important part of the edge that the United States has had militarily for decades. It is why, frankly, we are on top of the world. Nobody can come close to touching us right now.

And this modeling and simulation is just part of that. I have just finished a lengthy essay on health care, which I published last week in the National Review Online. A challenge that we are all facing with regard to programs like this is funding—across DOD, across the government, across the country.

And we are running up an awful lot of red ink. In this article I suggest that the principle problem with funding, with red ink, where health care is concerned is our third party payer system. And over the last year I have had lots of discussions with my colleagues, and I am just not able to sort of break through with my colleagues about the importance of looking at the impact, cost-wise, of comprehensive health insurance, and that model nationally, and what would be a better model, a different model.

And in the article, frankly, one of the things that I say—I use a couple of analogies. The best one that I can think of is splitting the tab for dinner, and I hypothesize the entire country every night going out and splitting the tab for dinner, and then I hypothesize—I just sort of wonder, well, what happens to the national economy and to individual wealth over time as a result of that?

But I specifically call for modeling. I mean, modeling is the way you wind up getting to the bottom line where—well, at least narrowing the range of differences of opinion concerning how much waste, costs, superfluous expenditures there are in the health care

system. And if we don't do that we are going to be really challenged to fund appropriate research and development modeling simulation.

Interesting, I walked in here—I am sorry I am late; I was doing a missile defense talk and came in and heard the last little bit about medical modeling. I have made a request for funding for medical simulation, trauma simulation, teaming up with Georgia National Guard and the Medical Center of Central Georgia, one of the very few tier-one trauma hospitals in Georgia, to use simulation as a mechanism for training troops—not just National Guard troops. Hopefully this center will wind up offering training that goes beyond the National Guard—training that will then help these folks where—actually dealing with trauma events, whether they are overseas or here in the United States, multiple casualties, and how do you handle that?

And that takes money. It is a $3.5 million request. Well, you know, multiply that over all the different things that you are doing, and I guess I find myself wondering whether or not it is your impressions—and I guess you will have to rely somewhat on your predecessors, as well—is it your impressions that, through the different administrations, our commitment to simulation and modeling, and the development of simulation and modeling, has remained fairly consistent and funding has been stable, if anything it has been increasing in an appropriate way?

Or do you have the impression that as one administration comes in and replaces another all of a sudden the programs change, the funding levels change, and we are on this rollercoaster ride with regard to this critically important aspect of national defense that makes it very difficult for industry to plan how to partner with government to actually effectively develop the kind of simulation and modeling programs that we need?

Are we sufficiently stable, gentlemen?

Admiral BURKE. Let me start with that——

Admiral LEWIS. May I——

Admiral BURKE. Go ahead.

Admiral LEWIS. May I start, Bill?

Okay. Thank you, Congressman. Those are great questions related to the private sector, and certainly in the health care situation that we currently face in the United States now. Health care itself is certainly out of my lane, but in terms of the utilization of simulation in training of health care professionals, it is exploding within the country, I think partly because of the support that we, in the private sector, have—and then the health care industry, specifically—have received from the Congress of the United States.

The M&S Caucus—Modeling and Simulation Caucus—the inception of that organization—the interest that was shown by the House of Representatives was a watershed event for the nation in terms of modeling and simulation is concerned—a watershed event in the sense that it gave the community the status that we have so long desired to achieve. But because of that and the interest that is developing here in this hearing this morning, for example, is—I think it is truly significant.

It has caused many throughout the nation in different domains within our economy—specifically in health care—to focus a lot

more attention and their own resources—not federal resources, but their own resources—on the development of simulation centers within hospitals and clinics across the nation. Mayo Clinic has a first-rate simulation center. There are hospitals in the Northeast that have first-rate simulation centers.

The Medical College of Virginia, in Hampton Roads, has a simulation center. There is one now in Central Florida, as part of the new medical facility down in the Central Florida region. So it is growing by leaps and bounds.

There is a new organization which stood up about five years ago in the country. It is called the Society for Simulation in Healthcare. It began with four people: an anesthesiologist, two nurses, and an obstetrician. It has now grown to total about 2,500 people.

Mr. MARSHALL. I find that very helpful. Do you mind if I—I am, though, specifically interested in your impressions concerning the sort of steadiness, administration to administration, of the program and the funding within DOD for modeling and simulation.

I know that there has been an explosion of interest nationally in this, and I am just wondering, are we—it is so difficult for a private sector to partner with government when government is on a rollercoaster ride from administration to administration. How do I, as an entity, partner with somebody who is flaky and can't be relied upon?

So my question specifically is, are we being consistent? Are we predictable with regard to our investments and our programs?

Admiral BURKE. Thank you, sir, for the question. I don't detect any change from administration to administration in funding. What I do detect, however, is that there are a bunch of things driving the desire for simulation now.

And as an example of the first point I made, I said earlier I grew up in the submarine force. I remember reporting to my first submarine and going right to the submarine simulator, or the attack center simulator, and working with the crew to get proficient in that arena. So that was some 30 years ago, so we have been using these for a long time.

Now, what I think is happening is recognition of fuel costs, and so recognition that fuel costs are going to go up, and so that is certainly a driver for simulators. If you use simulators your operating costs will go down, you will have less wear and tear, therefore less maintenance, therefore greater operational availability at less cost. So all those things are working together.

But I would say that the other thing that has happened is it used to be, in the Navy, for instance, community-specific. Some communities would be more interested in simulators than others. And that is a cultural change that is occurring, and now I know I work for a Chief of Naval Operations that is pushing simulators. I know I work for a Secretary of the Navy that is very interested in simulators.

I don't think it is because of a political bent; I think it is because of the time. I think the technology is exploding, and so the combination of the technology overcoming some of the cultural barriers and the requirement to save both fuel costs and produce operational availability at less cost are driving the explosion in military use of simulators.

Mr. MARSHALL. Thank you for your indulgence, Mr. Chairman.

Mr. ORTIZ. Mr. Wittman.

Mr. WITTMAN. Thank you, Mr. Chairman.

Members of the panel, thank you so much for joining us today and thank you for your service to our nation. I do want to get a sense of how our modeling and simulation is being applied, and I know that there is one dimension that it can assume, but I want to make sure, too, that there is—or understand that there is a balance there.

And obviously modeling and simulation can help, but it can also take us down the road of more of a test-taking, outcome-based effort than it is to really simulate the realism of what our men and women in uniform will face. So just to ask the panel collectively, how are you all seeking a balance in the full training regimen and using modeling and simulation to meet those needs and making sure that there is a balance, that we are not in a "test-taking realm," but that we are in a mix of simulating reality, but also making sure that there is a mixture of that hands-on element, that while modeling and simulation can do a lot it is not the be all and end all.

So I would like your perspective on how you all see that balance being attained in integrating modeling and simulation into the force structure needs.

Admiral BURKE. Thanks for the question, sir.

I think we were probably there a couple years ago. By our own internal work we figured out that maybe we had become overreliant on computer-based training, if you will, particularly at some of our basic levels. So we have been striving to achieve balance in that area.

I would say today we have got about—in that school environment we have about 8,500 instructors, and that results in a one to six instructor to student ratio, which we would love to have at our schools today. But we believe in this blended learning concept, and so a mix of computer-based training and live instructor.

I think one of the benefits of computer-based training is we find that the people will dig into areas on their own where they are not comfortable. They will quickly pass by areas where they do have a comfort level and dig into some of those more challenging levels for them, and that may be different than what you find in a full classroom environment, so there are positives there.

Now, we have shifted to hands-on training for things like valve repairs, and then we also have developed some front panel simulators, which look like a diesel engine, or look like an oxygen generator, and you can go and push the buttons and you get the noises and actual indications of a real simulator or of the real platform, but it is a simulator. So I think it is a step in the right direction, but we do, as you suggest, recognize there is a need for balance, and we are striving to achieve that balance today, sir.

Mr. WITTMAN. Good.

General Layfield.

General LAYFIELD. Thank you, Congressman, and thank you for your support to the military and their families, as indicated. I would like to specifically talk about computer-based training as we

know it today—our virtual training, our online training, and our models and simulations.

I do believe that the early days of computer-based training may have been somewhat test-oriented. It may have been programmatic and lockstep. However, today's computer-based models and all of our learning has grown so fast—our methodologies and how we learn—and that our modeling and our simulations associated with that are also growing, and we are learning from advancements in technology.

I will give you a specific example. We have online, in conjunction with our services, developed a course that is called Virtual Cultural Awareness Training. It is called VCAT for short. It is a place you can go; it utilizes modeling and simulations. You can go to it online from home station or forward deployed, for that matter.

But it immerses you in a set of challenges, a set of scenarios. It takes you to a place where you have to make decisions and it provides you feedback. And it allows you to see what happens when you maybe make the wrong decision.

And it doesn't give you a test, and it doesn't give you a score. It gives you very clear feedback on how you are performing in this particular environment. And we find that to be very valuable.

Thank you.

Mr. WITTMAN. Thank you.

General Gibson.

General GIBSON. Sir, I apologize. I may have misunderstood your question initially. I thought you meant the balance between tests through modeling and simulation versus using it in an experiential training method.

Mr. WITTMAN. Well, that can certainly be one dimension of the question. If you would like to answer that dimension that would be great.

General GIBSON. Sir, and I will touch on the other in the sense that, yes, we use computer-based training throughout and strike a balance with the hands-on training before final evaluation all the way through OJT [on the job training] and supervision.

But coming back, we are organized, obviously, as we bring new systems onboard from corporate to developmental testing, which we explore how that better applies with the blue-suit operator, and in our scenarios, then to operational test and evaluation, where again, we take it to the next level of application of new systems—introducing new systems, weapons, software. And finally, obviously, we use a lot of simulation in—from steps of par task training, where you just repetitively begin at the beginning, as it were, to where we do these networked operations that we talked about in a virtual environment.

And as I have mentioned earlier in my testimony, especially today in many of our fifth-gen [generation] aircraft and systems, that is the only place that we will choose to operate and use all those weapons and systems that are available to us. So a very expansive into the mission testing capability.

Mr. WITTMAN. Thank you, Mr. Chairman.

Mr. ORTIZ. Thank you.

Admiral Burke, this subcommittee is much aware of challenges that the Navy is facing in regard to manning, training, and mainte-

nance of surface fleet ships. Could you please explain how the Navy's response to those challenges would be reflected in the readiness models?

Admiral BURKE. Yes, sir.

The way the readiness models work is they take a bunch of different inputs, and so all of them consider the force structure, they consider the schedule, they consider the training requirements and what happened in previous years, and then dependent upon which portion you are talking about—and in this case I think we are talking about ship readiness models—then they take specific steps to figure out what the cost requirement would be.

So the model simply responds to the database that we would have entered into it. So if we said, in the case of surface ships, that we would now want to—we now recognize that we have not been doing enough maintenance on them and we raise the maintenance requirement then that will raise the cost of doing business. Now, that is easy to understand but it is not simple to figure out how much that cost requirement will change.

So additionally, if you put more people on board then that will change the amount of maintenance that is being done by the ship—by the ship's force—and consequently should reduce the maintenance that is being done off the ship. So there are competing pieces in that and the model will take all that information in once we tell it what the new requirements are and it will give us a cost.

Does that get at your question, sir?

Mr. ORTIZ. Yes. But let me ask you, now, when you take the retakes some steps to figure out that how long does this step that you have to take—how long does it take to get to the bottom of the problem that you are looking at?

Admiral BURKE. From a model perspective, sir, it is very simple. It is changing a few inputs.

The more challenging piece to this is determining what the actual requirement is. So if you decide that you now need to do much more maintenance on the ship you have to figure out what that specific maintenance is. Does that maintenance mean we are going to open up some tanks and we are going to do some repairs to those tanks? Does it mean we are going to do additional maintenance on pumps, valves, et cetera?

That is the more challenging work, and that is the work that the Naval Sea Systems Command is doing now as they have completed several inspections of ships to know better what areas will need additional work. Once they have done that work it is—very rapidly, inside a day, we can generate new cost requirements, sir.

Mr. ORTIZ. Because I know that throughout some of the hearings that we have had in the past one of the problems I see is that even when we get new ships coming aboard some of them are rusted, the doors don't close, you know what I am talking about. So we also need to see how we can correct that, because the taxpayers are paying a heck of a lot of money, you know, and we hope that we get what we are paying for. And sometimes I think that maybe we are not—maybe we don't have enough personnel.

But this is something that we need to look, you know, forward to, to correcting all this. And I know that you are doing your best,

but we are here to see—how we can help you to reduce some of this.

Now, the next question that I have is, what type of facts or events would require you—and I know you got into some of them—to require you to modify the readiness models? How quickly can the models respond to changing operational requirements?

Admiral BURKE. Yes, sir.

Once again, the models will respond very rapidly to changing operational requirements. So what would happen in this case is COCOM X would require additional forces; we would—once that demand signal was adjudicated then we would—we could easily determine what it would take to generate that requirement and what it would cost to do that.

Now, you know, there is only so much you can do. I mean, you can't get blood out of a stone, but within reasonable parameters of the same force structure and the same training requirements it is relatively easy to generate that new cost requirement, sir.

Mr. ORTIZ. And I will ask another question before I yield to my ranking member here, but your testimony stated that there was no direct connection between program steaming days and what was actually required to prepare for and execute the operations schedule. How have the models changed this, and how is the change reflected in the Navy's annual budget submission?

Admiral BURKE. Sir, I am not sure I heard the first part of your question. Could you repeat it, please?

Mr. ORTIZ. Yes, sir—your testimony there was no direct connection between—and this is what you stated—between programs steaming days and what was actually required to prepare for and execute the operational schedule. How have the models changed this and how is that change reflected in the Navy's annual budget submission?

Admiral BURKE. Yes, sir.

In the past there was no real connection between—there was—I guess I—maybe I was too strong. There was a connection, it just wasn't as obvious as it is today with the model. So what we would essentially say was, "Here is what worked last year. We need to generate about the same amount of presence, so therefore we need the same amount of steaming days or flying hours to do that."

Now what we do is we start from the demand signal and we—once that is adjudicated—and then we use our FRP, our Fleet Readiness Program, to figure out—let's talk ships for a minute—to find out how much time the ship is going to be in the basic phase, the intermediate phase, the sustainment phase, and the maintenance phase to produce that level of presence at a particular readiness.

And then from that we go into the specifics of how much the fuel costs, how much the utilities cost, how much training costs, et cetera, and then that generates the number of steaming days and the cost to do that.

So it is more than steaming days because some of that time is spent alongside the pier doing other training, and we don't—so that output at the end is based on all those different pieces for the force that we have.

It is pretty complicated, sir, and I know we have taken some of your staff through it and shown them how it works, but it is not real easy to explain. I am trying to do my best here.

Mr. ORTIZ. I know, I know. And I know that you always try to do your best, but—and the reason I ask this is because in prior budget requests we have seen where the Navy has cut steaming days.

Admiral BURKE. Yes, sir.

Mr. ORTIZ. You know that. But I think that this is a very—part of the training that needs to be done——

Admiral BURKE. Yes, sir.

Mr. ORTIZ [continuing]. But I hope—you know, we are here today because we are working together and we hope that with this simulation modeling can help us get to where we want to go by not only protecting our sailors and Marines and soldiers, but also, you know, giving the equipment that we utilize longer life because—and save the taxpayers as much money as we can, because I know that Secretary Gates came down not too long ago and said, "We need to cut down."

Admiral BURKE. Yes, sir.

Mr. ORTIZ. You know, it is not easy. You know, it always comes to mind that we are concerned for the lives of these young men and women who are serving. We want to be sure that they have what they need so that they can survive these horrendous two wars that we are involved in.

But I know that you are doing your best and we want to work with you at any idea that you come to us so that we can help you, let us know.

Let me yield to my good friend, Mr. Forbes.

Mr. FORBES. Thank you, Mr. Chairman, and I will be brief.

I want to kind of follow up on what Mr. Marshall asked. And Jim, your question, I think, a lot was on the funding rollercoaster that we have had, but it is more than funding.

And so the question that I would leave to all of you to respond to is, how can DOD be kind of a national leader in the preemptive use of modeling and simulation so that we can respond to crisis situations? Is our current DOD governance such that it maximizes our modeling and simulation investment?

But then the third thing—and this is what I was listening to as Jim was asking his question—are we giving the right signals to the industry as to what DOD needs in terms of modeling and simulation, because it is not just the funding stream, but sometimes it is that the industry is sitting out there saying you want one thing on Monday and another thing on Wednesday. Do we have a mechanism—to be able to give a clear picture to industry—this is what we need and this is what we think we are going to need over the next several years?

And so I will throw that out to any of you who want to take a stab at that. You know, how do we become that preemptive leader and are we sending the right messages out to the private industry?

General LAYFIELD. Congressman, let me take a stab at that from a Joint Forces Command and training angle. The bread and butter of what we do for an exercise when we deliver a mission rehearsal exercise to the combatant commander for him to train on is rel-

evance. And with respect to that, our modeling—our models and our simulations need to deliver. They need to deliver relevant simulations that replicate the battlespace that they are operating in.

With respect to that, we have to spend and focus all of our efforts in the right direction, and there is no room for waste, of course. Therefore, the requirements systems that we have inside Joint Forces Command, with the services, and with the Office of the Secretary of Defense do, in fact, provide us adequate oversight to lay out those requirements on the table and match the appropriate resources with it, and I want to thank you for supporting the President's budget in that respect.

I have to say that subordinate to that, at the flag officer and general officer level, where we meet in forums like a training community of interest or an executive board for the application of the $285 million for immersive training, we meet frequently to make sure that our requirements are in balance and that they are delivered to the Office of the Secretary of Defense appropriately. As a matter of fact, today I will attend the meeting specifically with that in mind where I will gather with other flag officers and general officers and SESers [Senior Executive Service] at OSD to discuss, are we getting after immersive training with the resources we were given?

So thank you very much for the opportunity to discuss that from Joint Forces Command.

Mr. FORBES. Anyone else want to take a bite at that?

General GIBSON. Sir, just briefly, I think, not to necessarily address the rollercoaster but as budgets come and go, obviously I heard the term earlier "culture." We have that in our Air Force and DOD as we do anywhere, but as you begin to prioritize, as resources become constrained obviously we put a priority towards maintaining the aircraft and the actual systems because in the end that is what you will go to war with.

And so there is a tendency sometimes, and those difficult challenges in the times that the simulation budgets will shrink or you will delay some of that concurrency that we talked about, keeping them relevant, and then that has a negative impact on the trainers' perceptions of the value.

So I would just offer that as you begin to have budgets that become constrained, the first priority goes to the live-fly and the actual systems and the maintenance of those, and then the simulation and the virtual environments sometimes take a second tier, and that is where I have seen the impact.

Mr. FORBES. And, General, one thing I would just throw out to all of you—and I think we are united on saying this but I don't want to speak for my colleagues—it seems, almost, we should be doing the reverse. It seems like modeling and simulation of everything that we are utilizing, when budgets get tighter and things are tougher, modeling and simulation is the one vehicle that helps us navigate through those tight budgets, also helps us become more efficient and make sure that we have the readiness that we need.

And so we need help from you as to how we continue that to make sure that we are not having that trimmed and cut.

And, Admiral Lewis, do you have any comments on——

Admiral LEWIS. Yes, sir. Thank you, Congressman.

One comment, and that is, as you described and were looking at is the relationship between and government, specifically with DOD. For the most part industry has a fairly good understanding of the requirements as they emerge from the different services and from the joint apparatus that we work with.

However, there is always room for improvement. And so we strive and work very hard on both the industry side and on the government side to have a continuing dialogue between the two, to ensure that both sides understand the art of the possible, as far as the government is concerned, and that, as far as industry is concerned, we have a full and complete understanding of the requirement.

Now, that dialogue ebbs and flows over time, and it depends on a number of different factors, but sometimes we find the dialogue is hindered by regulation, restrictions, and so forth, and then there are periods when there is complete open and honest and forthright communication between the two sides. But that is something we have to live with. We know that occurs and we have to deal with it.

So I would say that for the most part, because of that dialogue—the interchange—and the bridge that is provided by industry associations like mine ensure that that communication is enhanced and continues to flow. I think that overall, though, we have an understanding of the way this system works and we go forward from there.

Mr. FORBES. Well, I want to thank all of you for your work. I am going to yield back the balance of my time, but I also want to encourage you that even though the hearing technically will end in a few minutes the record is still open, so we would love to have your responses or thoughts if you would like to put anything in there that we can utilize to help with this industry and the great work all of you are doing.

And, Mr. Chairman, I yield back the balance of my time.

Mr. MARSHALL [presiding]. Thank you, Randy.

Mr. Wittman.

Mr. WITTMAN. Thank you, Mr. Chairman.

I just have one quick question. I want to kind of follow up on Congressman Forbes' question to Admiral Lewis.

I know as we talk to folks in the modeling and simulation industry we talk about encouraging innovation, encouraging creativity, encouraging them to kind of push the envelope. Do you think that—number one—that the capacity is there for them to push the envelope, and do you think that they are doing that in such a way that precipitates thought amongst our service branches on what the future capabilities of modeling and simulation bring to the table?

In other words, I see it kind of as a two-way street, not only as a clear demand signal, but also the industry pushing the envelope so that the service branches can understand potentially what is out there and what the capabilities might be in the future, and that hopefully that spawns innovation and creativity.

Admiral LEWIS. Well, thank you, Congressman, for that opportunity. But very briefly, just let me say that the stimulation of innovation and creativity, I think, is alive and well within the mod-

eling and simulation industry and the companies and corporations that are involved in that kind of activity.

I will give you an example. I know you have been to ITSEC. Thank you, sir, for your participation. We look forward to you returning again later on this year.

But at that event we have about 500 exhibitors, and typically we have 100 new—100 to 150 new exhibitors every year. So what happens between—to those 100 to 150 that are replaced each and every year? Well, most of them are small companies, small—20 to 25 personnel within a company. They have got one idea.

This is America at its best when we see this kind of activity occurring, these people, these entrepreneurs with one good idea. They showcase that idea at an event like ITSEC, for example, and they either succeed and they go on, they get bought up, or, sadly, some of them probably fail.

But that is alive and well. The ability—the capacity is there. The desire is there. And the intellect is there to go forward and develop these new things that the services do find of value even though they may not have had a, you know, an overt requirement for that particular piece of capability.

Mr. WITTMAN. Thank you, Admiral Lewis.

Mr. Chairman, I yield back.

Mr. MARSHALL. All of us have experienced your simulators. I have been in a couple of Air Force simulators, done one Army simulator.

But I have to say, Admiral, that the naval simulator up at Annapolis was very helpful to the Navy, at least in one instance. A group of us from Congress went up there on a CODEL [Congressional Delegation]—pretty easy. You just drive up to Annapolis, no big deal—with the idea that we were going to be playing faculty and staff in baseball after the CODEL. And right before we were going to go out and play the baseball game you put us in a simulator and half the team was seasick for the game. So I thought that was actually a pretty good strategy in the use of simulators.

I want to thank you all for what you do. It is terribly important to national defense. We need to fund you adequately, give you the kind of support that you need in order to do this.

And with that, we are adjourned.

[Whereupon, at 11:55 a.m., the subcommittee was adjourned.]

A P P E N D I X

JULY 20, 2010

PREPARED STATEMENTS SUBMITTED FOR THE RECORD

JULY 20, 2010

Opening Statement by Chairman Solomon Ortiz
Readiness Subcommittee Hearing on
Modeling and Simulation: Enhancing Military Readiness
July 20, 2010

The subcommittee will come to order. Today the Readiness Subcommittee meets to hear testimony on the use of modeling and simulation to enhance military readiness. I thank our distinguished witnesses from the Department of Defense and industry for appearing before this subcommittee today.

As co-chairman of the congressional Modeling and Simulation Caucus with my friend Randy Forbes of Virginia, I am very pleased to have this opportunity to discuss how modeling and simulation can improve training, reduce operation and maintenance costs, and increase the lifecycle of weapons systems. Our thanks go to Joint Forces Command for providing the Future Immersive Training Environment simulator so that Members could get a first-hand experience with the latest simulation technology.

The military services have all, to some degree, invested in modeling and simulation to improve training, reduce costs, and improve the accuracy of budgeting and material maintenance projections. The services' efforts vary in complexity and change continuously as technological advances in modeling and simulation provide improved capability shaped to meet Department of Defense needs.

Today we will examine a few of the modeling and simulation tools available to the Department as examples of how this technology helps enhance military readiness. These range from the Navy's readiness models used to determine resourcing requirements such as flying hours and maintenance activities, to immersive training for ground combat, realistic flight simulation, and networked mission operations.

We will also look at how industry responds to the Department's needs for modeling and simulation capabilities, as well as examine potential down sides to over-reliance upon simulated versus real-world training.

Our witnesses today are: Vice Admiral William Burke, US Navy, Deputy Chief of Naval Operations, Fleet Readiness and Logistics (N4); Major General Stephen R. Layfield, US Army, Director, Joint Training and Joint Warfighting Center, United States Joint Forces Command; Major General Marke F. Gibson, US Air Force, Director of Operations, Deputy Chief of Staff for Operations, Plans and Requirements, Headquarters U.S. Air Force; and Rear Admiral Fred L. Lewis, US Navy (Retired), President, National Training and Simulation Association.

The Chair recognizes the distinguished gentleman from Virginia, Mr. Forbes, for any remarks he would like to make.

Opening Statement by Ranking Member Randy Forbes
Readiness Subcommittee Hearing on
Modeling and Simulation: Enhancing Military Readiness
July 20, 2010

Thank you, Mr. Chairman. I want to start by expressing my appreciation to you for holding this hearing and to thank you for all the work you have done with the Modeling and Simulation (M&S) Caucus. For our colleagues that may not be familiar with the Modeling and Simulation Caucus, our focus is to promote the M&S industry, encourage the study of M&S at institutes of higher education, and to serve as a forum to address the policy challenges facing this growing national strategic technology.

While today's hearing is focused on the use of M&S to enhance the readiness of our military forces, I'd like to take just a brief moment to invite all of our colleagues on the committee to join us on the caucus. This really is a diverse and rapidly expanding industry that provides terrific opportunities, particularly for our young people with an interest in math, science, engineering and technology.

We've all heard a lot of talk lately about Secretary Gates and others exploring efforts to find efficiencies in the Department of Defense. I don't think anyone would disagree that it is imperative in these financially challenging times that we get the best value for every single tax dollar we spend. I believe that the subject before the committee today can be a very effective tool in not only reducing costs across the Defense Department, but can also enhance training and improve readiness.

When we talk about modeling and simulation, we tend to think about a traditional flight simulator or a basic budget tool to calculate funding required to resource a specific requirement. However, the world of M&S is much more diverse and spans across all mission areas of the Department of Defense. Capabilities that we could have only dreamed about a few years ago are now available, accessible and affordable.

America is replete with creative people endowed with a solution oriented culture and spirit. This very spirit is the well-spring of entrepreneurial endeavors, the font of job creation, and the source of wealth for the nation.

Whether it is Katrina or the Gulf Oil Spill, America needs a process to bring to bear creative solutions to critical problems quickly if not proactively. I believe that Modeling and Simulation is the very industry that could serve as the platform upon which to build a national crisis response solution repository staffed by the best, the brightest, and most creative of our government response agencies. This true interagency effort that would leverage the advanced technological capabilities to quickly, effectively, and inexpensively determine the best solutions to the complex problems and acute crises that develop during the course of our lives.

Imagine modeling and simulating thousands of solutions, solutions that may come from established industry, a startup company or perhaps even somebody just fiddling in their garage to tragic events such as Katrina or the Gulf Oil Spill quickly, cheaply and having the foreknowledge of what would most like be the right course to take. Imagine a crisis solution in hours or days rather than months.

I believe a new era is emerging and we have a terrific panel of witnesses with us today to talk about some of these things and I want to welcome them to the committee. Gentlemen—thank you all for taking the time to meet with us and discuss this exciting subject. I look forward to your testimony and to a good discussion on the use of M&S tools to reduce costs and improve the readiness of our military.

NOT FOR PUBLICATION UNTIL
RELEASED BY THE HOUSE
ARMED SERVICES SUBCOMMITTEE
ON READINESS

STATEMENT OF

VADM WILLIAM BURKE, USN,
OPNAV FLEET READINESS & LOGISTICS

BEFORE THE

HOUSE ARMED SERVICES SUBCOMMITTEE

ON READINESS

20 JULY 2010

NOT FOR PUBLICATION UNTIL
RELEASED BY THE
HOUSE ARMED SERVICES SUBCOMMITTEE ON
READINESS

DRAFT M&S TESTIMONY – 20 July 10

Chairman Ortiz, Rep Forbes, distinguished members of the House Armed Services Readiness Subcommittee; it's my honor to appear before you to testify on the Navy readiness models. Our Navy remains the preeminent maritime power, and continues to be globally engaged to prevent conflict and deter aggression in the western Pacific, Persian Gulf, Arabian Sea and Indian Ocean. Accordingly, we continue to provide support for the demand for U.S Naval forces to meet regional Combatant Commander operational requirements. Presently, over 40 percent of our Fleet (approximately 120 ships) is deployed to support a variety of missions, while demonstrating the overall capabilities of our Maritime Strategy. At sea in CENTCOM, we have more than 9,000 Sailors (including a carrier strike group) dedicated to providing air support to U.S. and coalition ground forces in Afghanistan, in addition to surface combatants supporting ballistic missile defense, anti-piracy, maritime security, counterterrorism, theater security, security force assistance and humanitarian assistance. On the ground, we have more than 12,000 Active and Reserve Sailors performing Navy Special Warfare and Navy Expeditionary Combat Command missions to support US and coalition forces in reconstruction efforts and providing critical infrastructure ashore, conducting interdiction patrols, leading counter-improvised explosive device patrols and providing related training to Iraqi/Afghan counterparts, and conducting combat operations.

Combatant Commander demand signal, as managed by the Global Force Management Board process, defines the capability needed to satisfy presence and surge

requirements worldwide. The Navy's operational readiness models identify the resource requirements necessary to produce that warfighting output and aptly predict changes to that output based on varying financial resource levels. Over the last several budget cycles, we recognized the need to transition from a level-of-effort requirement based heavily on historical norms, to a quantitative basis for reviewing and validating our current and future readiness requirements. We have embraced a family of resourcing models that have been subject to rigorous verification, validation and accreditation by institutions such as John Hopkins University Applied Physics Laboratory, providing the ability to predict the cost of global operations in a dynamic operating environment. These results form the basis of the Navy's readiness budget development throughout the programming, budgeting and execution process.

Readiness Modeling

The Navy operations and maintenance models have evolved in terms of sophistication and accuracy with the goal of linking resource requirements to specific readiness outputs. The original models were established by various war fighting platform resource sponsors to determine requirements for specific platform types. Over time those models were determined to be inadequate in modeling Fleet operations and accurately defining required resource levels. The original models were not capable of providing the level of detail required to support scenario driven analyses, analysis of budget adjustments or contingency operation pricing. Today, four interdependent maritime models linked through their relationship to the phases of the Fleet Response Plan (FRP), provide an integrated answer to support readiness requirement funding decisions. The

FRP phases are maintenance, basic, integrated and sustainment. They are explained in Appendix A. The four models below are described in greater detail in Appendix B.

Flying Hour Model

The Navy's Flying Hour Program model is used to program and budget resources for Navy and Marine Corps aviation operations necessary to achieve prescribed levels of readiness to conduct deployed operations and to train pilots and naval flight officers to properly man the Fleet.

Ship Operations Model

The Ship Operations model is used to program and budget resources for Fleet operations, including fuel, utilities, repair parts, and consumables for ships and submarines of the U.S. Navy except for those operated by the Military Sealift Command.

Ship Maintenance Model

The Ship Maintenance model is used to program and budget the resources to support the overhauls, repair, and maintenance of ships and submarines, except those operated by the Military Sealift Command including funding for scheduled and unscheduled depot and non-depot level workload conducted by both public shipyards and private sector contractors.

Aviation Depot Maintenance Model

The Aviation Depot Maintenance model is used to program and budget the resources to support the overhaul, repair and maintenance of Navy and Marine Corps airframes, engines and other aviation equipment. Depot maintenance is performed at both public and private facilities.

Readiness Output of the FRP Cycle

To express the readiness output of the fleet, the FRP phases of ships, battle-groups and units are described in terms of their ability to deploy operationally within a specified time period. The result is referred to as the FRP Operational Availability (A_o) metric and is shown as (X+Y+Z). While exact mapping is dependant on planned employment of units or battle-groups, the following table illustrates the relationship between FRP cycle phases and the FRP Ao metric that might apply to a battle-group.

FRP Cycle Phase	FRP A_o Metric
Maintenance	None
Basic	None
Integrated	Z
Sustainment	Y
Deployed	X

For example: For a carrier battle-group FRP Ao notional metric X+Y+Z = 3+3+1, the first number, X = 3 is the average number of CSGs (1 CVN, 1 CVW, 2 CGs, 3 DDGs & 2 SSNs) deployed in theater providing presence. Y = 3 is the average number of CSGs in the sustainment phase that have completed all necessary training and are available to surge within 30 days. Z = 1 is the average number of CSGs in the integrated training phase available to surge within 90 days.

Linking Readiness Output of the FRP Cycle to the Required Funding

Readiness models price each FRP phase using pricing factors shown in the Table below. A detailed discussion of each model is attached as Appendix B. Combining the readiness output provided by each phase of the FRP with the cost of that phase creates the required link between desired readiness output and budget levels.

Model	Key Inputs	Pricing Factors	Key Outputs
Flying Hour	Fleet Schedule Force Structure Training & Readiness Requirements Prior Year Execution Return Data	Cost per Flight Hour Cost Adjustment Sheet (CAS) process	Expected FRP Ao Readiness Rating (T-rating) Flying hours
Ship Operations	Fleet Schedule Force Structure Training & Readiness Requirements Prior Year Execution Return Data	Fuel Burn Rates by Ship Class Repair Part Cost Consumables Utilities	Expected FRP Ao Deployed / Non-Deployed steaming Days Total Steaming Days
Aviation Depot Maintenance	Force Structure Integrated Maintenance Concept Schedule (airframes) Engine Reliability - Flight Hours Prior Year Execution Return Data	Material & Labor Costs Workload Standards (man-hour estimates)	Workload by location and T/M/S # Backlog airframes & engines # Bare Firewalls FRP Ao
Ship Maintenance	Force Structure Class Maintenance Plans Fleet depot maintenance schedule Prior Year Execution Return Data	Material & Labor Costs Workload Standards (man-day estimates)	Workload by location & Ship Class Public Sector / Private Sector (Port) Workload Deferred Maintenance (# of unfunded availabilities)

Navy ships and aircraft are capital-intensive forces that, when properly maintained, are designed to last for decades to their associated expected service life (ESL). Scheduled maintenance of these ships and aircraft, and the associated training and certification of our crews between deployments is a key element of the cost to own and operate the fleet and our ability to reach ESL. Our readiness models are designed to accurately reflect the cost to own, train and operate our Naval forces.

Readiness Model Accreditation (VV&A process)

The four primary readiness models (Ship Operations, Ship Depot Maintenance, Flying Hour Program, Aviation Depot Maintenance) are used to make decisions that impact a large portion of the Navy's Operations and Maintenance account. The models follow a formal and rigorous validation process referred to as Verification, Validation and Accreditation (VV&A). This process ensures that modeling assumptions are well documented, that results produced by the models are stable, and that the correlation between the models behavior and actual Fleet execution is well understood. The models are accredited for three years. Near the end of the accreditation period, a formal team (Performance Pricing Model Accreditation Reviewing Team) is assembled to assess the ability of the model to provide a credible, traceable resource requirement.

Verification and validation functions are similar in concept to the application of quality control in manufacturing. The Performance Pricing Model Accreditation Reviewing Team is composed of individuals from OPNAV N80 (Programming Division), N81 (Assessments Division), N82/FMB (Fiscal Management Division) and

personnel from the Johns Hopkins University National Security Analysis Department. The Johns Hopkins University Applied Physics Laboratory "Quantitative Accreditation Method", a systematic/repeatable analysis process, was utilized to develop model improvement recommendations. The periodic accreditation review includes the model history, inputs/drivers, formulas/calculations, output, user and system documentation, performance levels, and the ability to simulate various scenarios of both fiscal and force level adjustments.

In addition to the periodic reviews, the process is reinitiated when models are modified to ensure that model documentation is accurate, and that the models are accurate and stable. The process is designed to provide recommendations for model improvement, track those recommendations through completion, and assign an appropriate level of accreditation so that decision makers clearly understand model limitations.

Accreditation Levels

Each readiness model is assigned one of several accreditation levels for performance/pricing as part of the review. These include:

Not Accredited The model is not useful in either the Programming or Budgeting phases of the PPBE (Planning, Programming, Budget and Execution) process and the circumstances resulting in this level of accreditation include: insufficient (or poorly defined) performance levels,

less than two key drivers, lack of resource sponsor endorsement, failure to link model to CNO guidance, more than 33% of program(s) modeled are Level Of Effort (LOE), or any other substantive weakness that would seriously undermine the credibility of the model in providing resource allocation decision insight.

Partial Accreditation The model is useful in all phases of the PPBE process except Budgeting. Less than 33% of modeled program is level-of-effort and requires separate action to convert model outputs for use in budget resource allocation decisions. The model is unable to routinely exercise the model's feedback loop. Other possible deficiencies include inadequate User's Guide or Configuration Management Plan, significant deficiencies in the model's V&V Report, including poorly defined or lack of a feedback loop, poorly defined performance levels, tenuous linkage to CNO guidance, technical errors in the model's computational aglorithms, or other discrepancies that would seriously undermine the credibility of the model's output.

Full Accreditation The model is useful in all phases of the PPBE process, whearas less than 20% of modeled program is level-of-effort. The model demonstrates the ability to trace between Programming and Budgeting phases of PPBE process. The model is useful in shaping Navy PPBE

Budget resource allocation decisions, and model results (output) can be compared to actual execution data.

All four of the models were certified at the Full Accreditation level during the POM-10 PPBE (FY 2008) cycle and will be reviewed again prior to the POM-14 PPBE (FY 2011) cycle. All four models have been awarded the Full Accreditation designation and are used throughout the entire PPBE process. Data from the most recent execution year is used as a feedback to determine if the planning and programming is consistent with actual requirements, allowing assessment review and adjustments where deviations are identified. Accurate use of inflation and pricing guidance is identified as a step in the accreditation process. All models meet an industry standard of less than five percent error acceptance level.

Generating the Navy's Budget

Use of Models in Planning, Programming, Budgeting, and Execution (PPBE)

Readiness models are used throughout the PPBE process as follows:

Planning: During the PPBE Planning phase, working groups review model accuracy based on the latest execution data available and make change recommendations. Those changes may be in the form of modeled requirement data such as the notional amount of work needed to complete a specific CNO availability for a specific ship class or in the form of an algorithm change such as changing travel requirement calculations to recognize the additional mandays of cost associated with travel.

Programming: During the Programming phase of PPBE, requirements working groups update the models for the latest Fleet operations and maintenance schedules and certified data such as civilian personnel labor and benefits costs and private sector man-day rates. The resulting modeled requirement is used to determine the impact of account shortfalls. Accounts are balanced so that, for example, the Flying Hour model FRP Ao output matches the Ship Operations Carrier Strike Group FRP Ao output.

Budgeting: During the PPBE Budgeting phase, the models are updated for significant schedule and certified data cost changes. The readiness impact of the changes is determined and budget issues are prepared to rebalance account input as required.

Execution: Fleet Readiness models are the result of significant focused effort designed to ensure that model output accurately reflects execution. Originating as a simple programming and budgeting tool, today's models are sufficiently detailed and user friendly to allow rapid mitigation and pricing of execution issues. Examples include:

- Calculation of the cost and impact of emergent operational requirements such as Operation Unified Response.
- Calculation of the cost and impact of emergent maintenance emergencies such as the grounding of the USS Port Royal.
- Calculation of the downstream cost and impact, both maintenance and operational, of the delayed delivery of the USS ENTERPRISE Extended Docking Selected Restricted Availability.

Where legacy models tended to price each element in isolation, today's readiness models contain cross model linkages that allow accurate recognition of cross model issues. Examples include:

- Cross model use of the CNO maintenance schedule allows the ship operations model to recognize and account for maintenance schedule changes.
- Linkage of intermediate and depot maintenance models with military billet information allow the impact of the military manning decisions to be accurately reflected in the maintenance requirement.
- Dynamic private sector port workload pricing allows the impact of port workload on prices to be accurately reflected in maintenance requirements.

Model detail is sufficient to allow effective study of potential cost mitigation options. Examples include:

- Readiness models have been used to price the impact of energy savings initiatives such as LED lighting and stern flaps on operational costs.
- Readiness models have been used to price the impact of the use of alternate energy such as the "Green Hornet" F/A 18 bio-fuel demonstration on operational costs.
- Readiness models have been used to calculate the operations and maintenance cost of alternate force structures in support of the Quadrennial Defense Review.

Impact of Funding Shortfalls on Readiness – Task Force Readiness II

To ensure common understanding of funding shortfall impacts on Navy readiness, and to ensure that the resulting risk is aligned with Navy priorities, the Chief of Naval Operations and Commander, United States Fleet Forces Command jointly commissioned Task Force Readiness II to develop detailed business rules for each account. These business rules, also referred to as "step down" rules, align with the following priorities:

1) Training & maintenance to support generation of forces in support of future presence requirements.
2) Presence to support the adjudicated Global Force Management Plan.
3) Surge in excess of that required to support future presence.

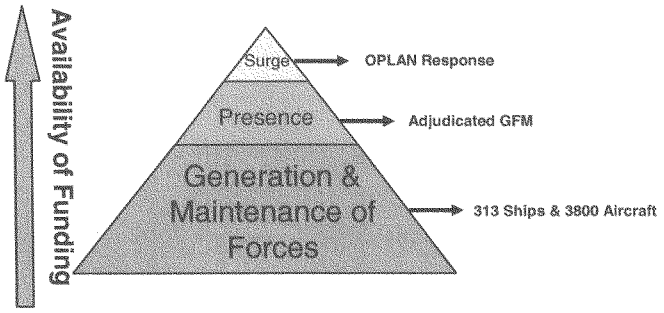

In accordance with these business rules, reduced funding for programmed steaming days are first taken against all 30 day surge (Y) requirements. Subsequent reductions are taken against Independent Deployer and Amphibious Readiness Group 90 day surge (Z) and presence (X) requirements prior to impacting any Carrier Strike Group presence (X)

requirements. The net result works to reduce 30 and 90 day surge (Y+Z) requirements, before impacting presence requirements (X) for Carrier Strike Groups, Amphibious Ready Groups, or Independent Deployers.

Conclusion

In the past several years the Navy has transitioned from a series of independent, level-of-effort based models that were based on past execution data to four significant interdependent quantitative readiness models that provide the critical linkage between requirements and readiness outputs. This linkage is essential to resource decision-making throughout the entire PPBE process in today's fiscally constrained environment.

Planned future model improvements will increase and strengthen the cross model linkages, reduce repetitive user work by automating inputs, and improve predictive capabilities.

I appreciate the committee's interest in the Navy's modeling and requirements generation efforts and look forward to discussing with you further.

Appendix A – Fleet Response Plan (FRP)

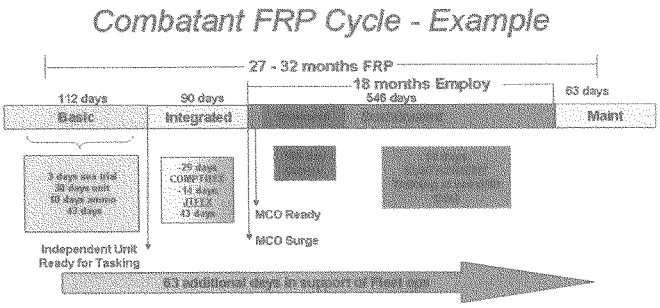

Four major phases constitute the FRP cycle:

Basic Phase (Unit-Level Training): The Basic Phase occurs at the start of the FRP cycle, and focuses on completion of the Type Commander (TYCOM) Unit-Level Training requirements: team training both onboard and ashore; unit-level exercises in port and at sea; and unit inspections, assessments, qualifications, and certifications. Units that have completed the Basic Phase are ready for more complex integrated training events and may be characterized as:

(a) Independent unit Ready for Tasking (RFT). Upon completion of the Basic Phase, units may be employed in support of Homeland Defense; counter-narcotics operations, Visit, Board, Search and Seizure missions, or similar, focused, and limited missions.

(b) Amphibious Task Force (ATF) Surge. ATF Surge ships can provide lift support only, and are not typically certified to conduct the full breadth of amphibious specialty tasks. These ships are capable of conducting combat and administrative loadout of ground forces in support of emergent requirements. They may support Special Operations Forces, Special Purpose Marine Air/Ground Task Forces, adaptive force packages, or provide lift as required.

Integrated Phase: The Integrated Phase of training is designed to synthesize individual units and staffs into aggregated, coordinated strike groups. The Integrated Phase may be may be adapted in order to provide training for Major Combat Operations (MCO) Surge certification and/or tailored training to support emergent Combatant Commander requirements for a specific capability. These units and forces may be characterized as (in order of increasing readiness):

(a) Maritime Security Surge (MSS): Typical MSS missions include Maritime Interception Operations, Strategic Offensive Forces support, anti-piracy operations, Theater Security Cooperation, and Information Operations.

(b) Major Combat Operations (MCO) Surge: MCO Surge ready units and forces are certified ready for operational employment and will have demonstrated the capability to function as a Navy-Naval combat force, but not necessarily to the level to lead such operations.

(c) Major Combat Operations Ready: MCO Ready units and forces are certified as fully capable of conducting all forward-deployed operations. To achieve certification, they must demonstrate the ability to operate in joint/coalition operations and proficiency in leading (vice only participating as is the case for MCO Surge) required missions. During deployment, units and forces maintain proficiency through ongoing training, exercises, and normal operations, as directed by higher authority.

Sustainment Phase: The Sustainment Phase begins upon completion of the Integrated Phase, continues throughout the post-deployment period and ends with the commencement of the Maintenance Phase. Deployments in support of Combatant Commander Global Force Management requirements occur within the Sustainment Phase. Sustainment consists of a variety of training evolutions designed to sustain war-fighting readiness as a group, multi-unit or unit until and following deployment.

Maintenance Phase: All deployable elements of Navy forces have a Maintenance Phase which ranges from fifteen weeks for surface combatants undergoing a non-docking pier side restricted availability up to 10.5 months for an aircraft carrier undergoing a Dry Docking Planned Incremental Availability. The Maintenance Phase is critical to the success of FRP since this is the period in which major shipyard or depot-level repairs, upgrades, and modernization installations occur.

The FRP Ao metric: Navy Readiness requirements are stated by combining average adjudicated GFM Plan presence requirements and the surge requirements needed to support the most stressing OPLAN in an X+Y+Z format where X represents the number of ships or battle-groups deployed, Y represents the number of 30-day surge ready ships or battle-groups, and Z represents the number of 90-day surge ready ships or battle groups. For example:

- A Carrier Strike Group FRP Ao of **3 + 3 + 1** means an average of 3 deployed Carrier Strike Groups, 3 Carrier Strike Groups ready to surge within 30 days, and 1 additional Carrier Strike Group ready to surge within 90 days. This metric would include all units of the battle group, typically one Aircraft Carrier, five Cruiser-Destroyers, and two Submarines.

A Cruiser – Destroyer FRP Ao of **27 + 25 + 14** means an average of 27 deployed Cruisers or Destroyers, 25 Cruiser or Destroyers ready to surge within 30 days, and 14 additional Cruisers or Destroyers ready to surge within 90 days. Please note that Cruisers or Destroyers that were assigned as part of a Carrier Strike Group would count towards both the Carrier Strike Group FRP Ao metric and the Cruiser – Destroyer FRP Ao metric.

Appendix B – Readiness Models

Flying Hour Model

The Navy's Flying Hour Program (FHP) resources Navy and Marine Corps aviation operations to achieve prescribed levels of readiness to conduct deployed operations and to train pilots and naval flight officers to properly man the fleet. The flying hours required to accomplish these missions and the cost per hour (CPH) for each flying hour are determined annually for each budget cycle. The FHP models were fully accredited by Johns Hopkins University and OPNAV N8B in January 2009.

The Flying Hour Resource Model (FHRM) compiles the flying hour requirement. The main inputs to FHRM are: (1) Global Force Management Schedule; (2) Training and Readiness (T&R) requirements; (3) Readiness objectives – for the Navy, it is a tiered readiness profile (Fleet Response Training Plan – FRTP) and for the Marine Corps it is a steady state readiness to allow for a surge-ready force; (4) Crew-Seat Ratio (CSR) – required number of crews per aircraft; (5) Aircrew Manning Factor (AMF)– level at which each squadron's aircrew is manned; and (6) Primary Authorized Aircraft (PAA) – the number of aircraft authorized to a squadron for the performance of its operational mission. The Marine Corps operational flying hour requirement is calculated in the Core Competency Resource Model which is then input into FHRM. The Marine Corps uses percent Table of Organization in lieu of the Navy's AMF, CSR, and PAA. The inputs to the operational flying hour requirement can be seen below.

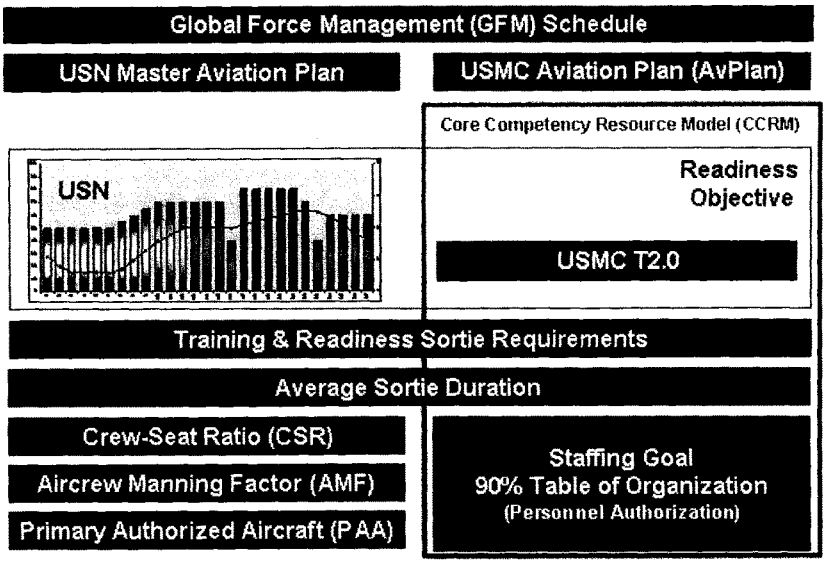

Inputs in to the Operational Flying Hour Requirement

For pilot and naval flight officer flight training, the main inputs are: (1) Training Requirements Letter – published by the Chief of Naval Operations stating the required number of pilots and naval flight officers to be trained based on Navy and Marine Corps force structure and (2) Fleet Replacement Squadron (FRS) and Chief of Naval Air Training (CNATRA) syllabus hours – the flying hours required per student to properly train in all missions applicable to the student's T/M/S.

The cost per hour (CPH) for each T/M/S consists of four components: (1) Aviation depot level repairables (AVDLR) (FA) - repairable components required to conduct organizational level maintenance and repair to aircraft and installed systems; (2) Maintenance consumables (FM) – consumable parts and materials required to conduct

organizational level maintenance and repair to aircraft and installed systems; (3) Fuel (FF); and (4) Direct maintenance contracts (FW).

The CPH is constructed using the Flying Hour Projection System (FHPS) model. The model uses the most recent year of certified execution data for the aviation depot level repairable cost per hour, maintenance consumable cost per hour, and fuel consumption rate to establish a baseline CPH. This historical data is given an "intelligent vector" through the Cost Adjustment Sheet (CAS) process. The CAS system is a module in FHPS. There are three types of CAS submissions: (1) Adjustments to the FA or FM CPH to reflect an expected difference from the execution baseline in the future (e.g., installation of new aircraft components and reliability changes to current components); (2) Baseline budgets for new T/M/S that do not have sufficient historical data; and (3) Direct-maintenance contracts (FW).

All data is escalated through the FYDP using mandated Assistant Secretary of the Navy (Financial Management & Comptroller) programming rates. Next the CAS submissions are migrated to the FA and FM cost per hour, and the CAS FW submissions produce the FW cost per hour. The next process is the application of the Center for Naval Analyses (CNA) flying hour and aging factor. The CNA factor is based on a statistical model of how the consumption of AVDLRs per flying hour changes with the age of the aircraft and the number of flying hours per aircraft. The development of the cost per hour is shown below.

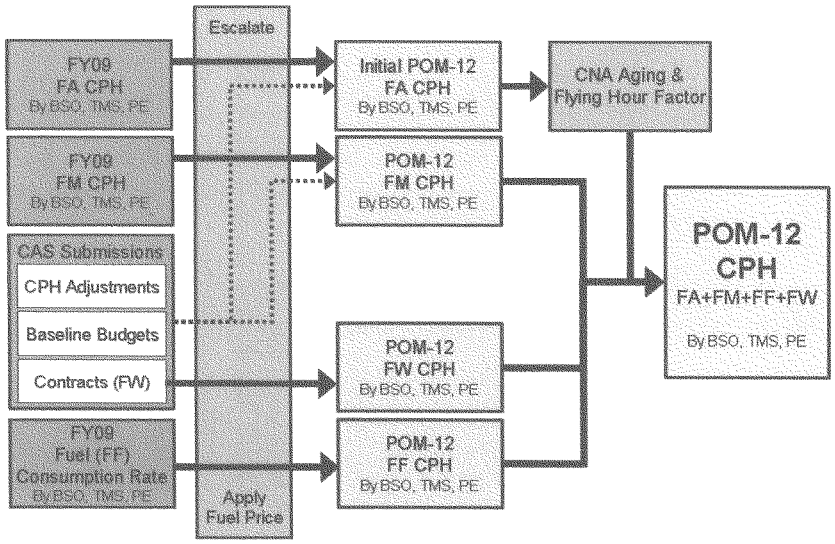

Building the Cost Per Hour (CPH)

The flight hour requirement from FHRM is an input to FHPS, which then applies the cost per hour to generate the FHP requirement in dollars. In FHPS, desired funding levels are applied to the requirements as the budget proceeds through its milestones. FHPS allows for queries by T/M/S, BSO, service, and/or program element (PE). Budget versions in FHPS include historical execution data, historical budgets, various funding scenarios, and working budgets.

The FHRM and FHPS models are used for risk analysis and trade-off decision making. Cost per hour is sent to FHRM through a feedback loop from FHPS. With the cost, FHRM can calculate the impact of funding changes through readiness (T-rating), operational availability (FRP Ao), and flight student deferral metrics. Additionally,

FHRM has extensive functionality to perform analyses at detailed level of funding changes or comparison of different budgets.

Ship Operations Model

The Ship Operations model is used to program and budget the Fleet Readiness requirement for ships and submarines of the U.S. Navy except for those operated by the Military Sealift Command. The Ship Operations model accounts for:

- Fuel
- Utilities
- Repair Parts
- Consumables
- Counter-Terrorism
- Training-Travel-Per Diem

Historically, the ship operations requirement was based on a number of deployed / non-deployed steaming days per quarter per ship class. There was no direct connection between programmed steaming days and what was actually required to prepare for and execute the operational schedule.

The model prices fuel, utilities, repair parts, consumables, travel, training, per diem, and counter-terrorism protection costs by Fleet, FRP phase and ship class. Combining the readiness output provided by each phase of the FRP with the cost of that phase creates the required link between readiness and requirement.

The following sections provide an explanation of the different cost elements supported by the ship operations model. *An example for a DDG-51 class ship is included in the description of each model element. Values used for illustration are notional for the basic phase of a DDG-51 class destroyer that is scheduled to become part of a Carrier Battle Group. This phase takes 112 calendar days to complete with 40 days spent underway. At the end of the basic phase the DDG-51 is 90 day surge ready (Z).*

Ship Fuel: Petroleum fuel requirements vary with the price of fuel, the number of underway (UW) days required for each phase, and the average burn rate for each UW and not-underway (NUW) day.

For the DDG-51 basic phase example:

UW fuel requirement = 40 days UW x 500.6 bbl/UW day x $115.18 / bbl = $2,307K

NUW fuel requirement = (112-40) days x 17.5 bbl /NUW day x $115.18 / bbl = $145K

Total basic phase fuel requirement = $2,307K + $145K = $2,452K

Ship Utilities: Utility requirements include electric power, shore steam, potable water, oily waste, and shore sewage but does not include phone service or garbage removal. Utility requirements vary with the local cost of utilities and the number of NUW days required for each phase.

For the DDG-51 basic phase example:

Basic phase Utilities = (112-40) days x $2,751 per NUW day = $198K

Ship Repair Parts: Parts and related materials required to conduct organizational level maintenance and repair to installed systems. Repair parts requirements vary by phase and by the cost of repair parts.

For the DDG-51 basic phase example:

Basic phase Repair Parts = 112 days x $6,118 per day = $685K

Ship OPTAR: OPTAR funds a long list of shipboard requirements including equipage items, personnel safety equipment, consumables, garbage removal, tugs, pilots, telephone service, and medical / dental allowance list items. OPTAR requirements vary by phase and by the local cost of goods and services.

For the DDG-51 basic phase example:

Basic phase OPTAR = 112 days x $3,026 per day = $339K

Ship Administration: Funds travel, TAD, and emergency leave costs for ships force personnel. Ship Administration requirements vary by phase.

For the DDG-51 basic phase example:

Basic phase Admin = 112 days x $197 per day = $22K

Counter Terrorism (CT): Funds Ships Force protection equipment, protective barriers, picket boats, sentries where armed servicemen are prohibited, and dive services. Counter Terrorism requirements vary by phase.

For the DDG-51 basic phase example:

Basic phase CT = 112 days x $99 per day = $11K

The total basic phase cost for this hull is determined by summing each individual element. The same process is then applied for each phase of the FRP cycle (e.g. Integrated, Deployed, Sustainment, etc.) and each hull included in the FRP.

There is a formal feedback loop in place as means of comparing execution data to model performance. However, as this is a new model, developed in support of POM-10, the validity and accuracy of the feedback mechanism was not originally tested and was not to be tested until the conclusion of FY-10 upon the receipt of certified obligation data. This revised model is utilized for programming POM-12. The demonstration of the model performance capabilities was documented using POM-08 data, with the cost of fuel removed due to the unpredictable rates experienced during FY08. In place of cost, the number of barrels of fuel required was assessed for the year. Results of the model prediction, relative to actual certified obligations were 4.03% under the non-fuel requirement prediction and 3.85% over the fuel requirement prediction.

Aviation Depot Maintenance Model

The Aviation Depot Maintenance (ADM) Program resources the overhaul, repair and maintenance of Navy and Marine Corps airframes, engines and other aviation equipment. Depot maintenance is performed at both public (DoD) and private (contractor) facilities. Approximately 800 airframes and 2300 engines/models are overhauled per fiscal year. The Airframe and Engine Depot Readiness Assessment Models (ADRAM and EDRAM) are used to project depot requirements by airframe and engine T/M/S through the FYDP. The ADRAM and EDRAM models were fully accredited by Johns Hopkins University and OPNAV N81 in March 2009.

The ADRAM model forecasts total cost to perform the number of airframe inductions required to achieve the targeted readiness level. The ADRAM can also be used to determine the level of airframe readiness achievable, based on various resource allocation decisions, and estimate the impact of these decisions by T/M/S. Inputs to ADRAM are aircraft inventory, Flight Line Entitlement (FLE), Integrated Maintenance Concept (IMC), depot turnaround time (TAT), Title 10 Core requirements, CNO readiness goals, squadron deployment profiles, and unit cost per type of depot event. The output is dependent upon the number of airframe inspections, rework, and emergent repair requirements of Naval aircraft that will be scheduled in order to meet the established CNO readiness goals.

Depot airframes events are calendar based. Each T/M/S has a certain time interval in which the airframe is required to be scheduled for maintenance or inspection in accordance with the IMC. IMC is the Reliability Centered Maintenance based analysis

and "packaging" of organizational, intermediate, and depot preventive maintenance tasks. It is embedded in a platform's maintenance plan to ensure tasks are performed at the fight interval and by the appropriate level of maintenance that will result in the highest degrees of availability and readiness at the lowest life cycle cost.

Depot TAT is the total amount of time that elapses from aircraft induction to returning an operational aircraft back to the fleet. TAT is dependent upon depot capacity constraints, complexity of inspection and repair, and available workforce. Capacity is contingent on the amount of airframe backlogs in the system and the current amount of work-in-process (WIP). In addition, the model considers depot core minimums which are prescribed by law. United States Code Title 10, Section 2466 stipulates that at least 50 percent of the funds made available for depot maintenance and repair "shall be used for the performance of depot-level maintenance and repair workload by employees of the Department of Defense".

One of the key performance parameters for performance-based pricing models is for the output to be linked to readiness goals. The CNO's readiness goal is to achieve 100 percent of PAA for deployed squadrons. The fleet provides the squadron deployment profile based on FRTP requirements.

The model generates program cost requirements by inputting depot event unit costs for each type of airframe incorporated in the program. These costs per unit (airframe) are based on engineered workload standards, labor rates, and material costs, and vary based

on whether the work is performed at an organic Naval, inter-service, or commercial depot. Unit costs are escalated per Assistant Secretary of the Navy (Financial Management & Comptroller) approved inflation rates and revolving fund rates. The formula for price of each T/M/S is workload standard times the labor rate plus direct material.

Using all of this information (backlog, WIP, TAT, core minimums, and unit cost by T/M/S), the funded airframe requirements are determined for each T/M/S. Airframes available are compared with the CNO's PAA goals to determine performance to the goal.

The EDRAM model forecasts the total cost of meeting an engine readiness goal. The output of the model is the cost to perform the required engine inductions necessary to return aircraft engines to Ready-for-Issue (RFI) status to achieve CNO objectives. Similar to the ADRAM, the EDRAM can also reveal program impacts of various resource funding levels. The model can be used to estimate the number of engines that can be inducted based on a certain level of funding and it can drill down through each engine T/M/S.

The current CNO goal for engine requirements is to have zero bare firewalls (BFW) and 90% of pool requirements for each engine T/M/S. The BFW metric is an aggregate accounting of total firewalls to support Flight Line Entitlement aircraft and support aircraft depot production schedules that need to be filled, minus the total RFI engines.

Pool requirements are built to have sufficient assets to meet both the peacetime demand and support initial wartime surge.

Key inputs to the EDRAM are planned flying hours, Mean Engine Flight Hours Between Removal (MEFHBR), the Intermediate Maintenance Activity (IMA) repair rate, current and projected aircraft inventory, and the unit cost per depot repair event for each T/M/S engine. Only those engines that cannot be repaired at the IMA level are inducted into the depot. Engine demand (removals for repair) is based on the number of forecasted flying hours as produced by the Flying Hour Resource Model (FHRM) and the MEFHBR. The engine removals for each T/M/S are calculated using the most recent 12 month average of MEFHBR as modified by predicted changes in reliability determined by engineering estimates from Naval Air Systems Command (NAVAIR), and dividing that into current projected flying hours. The remaining calculations are very similar to the ADRAM forecasting procedures. Engine requirements, based on demand, I-level repair rate, backlog and depot core minimum data, are determined. The unit costs per engine repair are based on build specs as developed by NAVAIR and the original equipment manufacturer. The costing methodology employed for the EDRAM mirrors the process discussed above for the ADRAM. Inflation rates, revolving fund rates, and workload standards are all factored into unit costs. The price to repair an engine for each T/M/S is obtained by multiplying the labor rate by the workload standard and adding the direct material. EDRAM then calculates the total engine program costs to perform at a certain level of engine readiness.

The ADRAM and EDRAM models are also used for risk analysis and trade-off decision making. These models validate airframe and engine requirements, choose the best mix to accomplish FRP Readiness Goals and depot inductions and projected backlog can be determined based on various funding levels. There is a feedback loop to verify the models' accuracy by comparing model projections against certified actual obligations.

Ship Maintenance Model

The Ship Maintenance account provides funding for scheduled and unscheduled depot and non-depot level workload conducted by both public shipyards and private sector contractors. Maintenance requirements are designed to ensure that ships, carriers, and submarines meet current readiness requirements and reach their expected service life.

The Ship Maintenance Model is divided into two major subsections, a traditional model and a mission funded model. Model inputs are based on the Class Maintenance Plan, Scheduled Modernization, and each ship's individual maintenance history. The Class Maintenance Plan specifies required dry-docking intervals, engineered maintenance requirements such as equipment overhauls, shaft replacements, and corrosion protection, and system certification requirements.

Class Maintenance Plans are prepared as part of new construction and are maintained by the three Life Cycle Maintenance Planning Activities: Submarine Maintenance Engineering Planning and Procurement Activity, in Kittery, ME, Carrier Planning Activity, Portsmouth, VA, and Surface Ship Life Cycle Management Activity, Portsmouth, VA. These three organizations monitor execution results and recommend Class Maintenance Plan updates based on those results.

The "**Traditional Model**", shown in Chart 1, contains the baseline maintenance scheduling for all vessels, defines the anticipated force structure, calculates total private industry expected costs, and continuous maintenance pricing. Traditional Model elements include:

a) **Emergent Restricted Availability/Technical Availability (ERATA)** is used to perform depot level unscheduled corrective maintenance.

b) **Other Restricted Availability/Technical Availability (ORATA)** is used to provide depot level support and maintenance. Items in this category include ship habitability upgrades, hull cleaning, flight deck non-skid coating repair and replacement, and technical support for combat and aviation systems.

c) **CNO scheduled availabilities** is depot maintenance for ships and submarines performed during dedicated maintenance availabilities. Labor pricing is derived from Private Sector Manday Rate (MDR) data published annually by Naval Sea Systems Command. Material requirements are determined based on a 3-year average of actual material costs per unit manday expended for each ship class

d) **Continuous Maintenance (CM)** is Depot Level Maintenance for surface ships performed outside of CNO scheduled availabilities. Labor and Material pricing use the same sources as CNO availabilities.

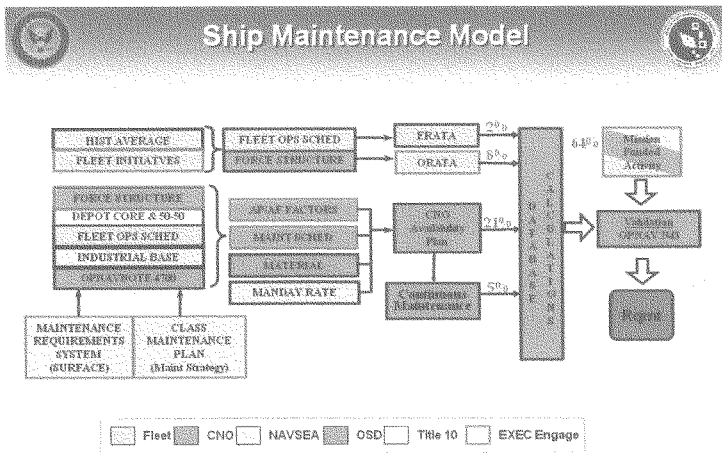

Chart 1: Traditional Ship Maintenance Model

The "**Mission Funded**" model, shown in Chart 2, is used to program and budget the overhead, labor, planning, parts, material, travel, and training costs associated with Naval Shipyard and Regional Maintenance Center operations.

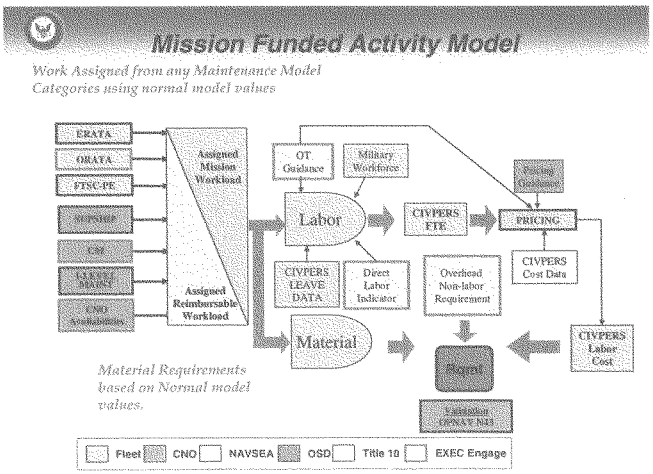

Chart 2: Mission Funded Activity Model

Naval Shipyards include Portsmouth Naval Shipyard, Norfolk Naval Shipyard, Puget Sound Naval Shipyard and Intermediate Maintenance Facility and Pearl Harbor Naval Shipyard and Intermediate Maintenance Facility. Mission Funded Naval Shipyard requirements are determined on an annual basis, based on class maintenance plan requirements. Mission Funded Activity workload includes elements of CM, ERATA, ORATA, Intermediate Level, and CNO Availabilities as assigned by the Fleet.

a) Shipyards are sized to execute designated Fleet work (mission) and reimbursable customer work.

b) Fleets have the flexibility to shift mission work force to emergent mission requirements.

c) All shipyards completed transition to Mission Funding from Working Capital Funding in FY 2007

Regional Maintenance Centers (RMC's) includes South West RMC, South East RMC, Mid-Atlantic RMC, Trident Refit Facility Kings Bay, and NSSF New London. The primary missions of RMCs are planning and execution of intermediate level repairs for assigned ships, Fleet technical support, continuous maintenance, and contracted private sector availabilities.

a) Workload requirements are based on the number of assigned ships, the type of ship, the availability schedules for the ships, the Integrated Class Maintenance Plans, and Fleet technical support.

b) Military manning at RMCs provides shore assignment opportunities, enhanced technical training and experience, and takes advantage of unique military repair capabilities.

c) The RMCs are sized using a combination of military, civilian, and contractor personnel to execute the assigned workload.

The primary model feedback mechanism is the continuous review and comparison of execution results performed by the Life Cycle Maintenance Planning Activities. When execution results vary significantly from the modeled requirement the applicable Life Cycle Maintenance Planning Activity analyzes the reasons for deviation and prepares a recommended change to the existing requirement. That recommended change is reviewed by the applicable Type Commander, the applicable Program Manager, United States Fleet Forces Command and approved by the Chief of Naval Operations.

FOR OFFICIAL USE ONLY until released by the House Armed Services Committee

STATEMENT OF

MAJOR GENERAL STEPHEN LAYFIELD, USA
DIRECTOR, JOINT TRAINING AND JOINT WARFIGHTING CENTER
UNITED STATES JOINT FORCES COMMAND

BEFORE THE HOUSE ARMED SERVICES COMMITTEE
SUBCOMMITTEE ON READINESS

July 20, 2010

FOR OFFICIAL USE ONLY until released by the House Armed Services Committee

Statement of

Major General Stephen R. Layfield, USA
Director, Joint Training and Joint Warfighting Center
United States Joint Forces Command

Before the House Armed Services Committee Subcommittee on Readiness

Today the U.S. military operates in an environment that is characterized by uncertainty, complexity, and rapid change. To prevail in this environment, the joint force must be capable, against a plethora of current threats, adaptable to rapidly emerging new threats, and ready to respond across the full range of military operations. The non-state, insurgent and terrorist adversaries the nation currently faces around the world have chosen asymmetric approaches to warfare that avoid the conventional strengths of the joint force. To counter these threats, the joint force must remain creative and flexible if we are to confound our enemies' designs.

Modeling and simulation (M&S) offers great potential to keep the joint force at its maximum effectiveness by instilling adaptability and flexibility where possible before the force is engaged in combat. By exposing leaders at every level to the complex operational environment, M&S offers an efficient and effective way to increase the readiness of the joint force from the headquarters to the small unit and individual level.

Effective joint training requires a joint environment, oftentimes synthetically generated, to enable the Joint Force to exercise in a broad range of warfighting tasks prior to executing them on the battlefield. This synthetically generated joint environment also supports joint experimentation, test and evaluation, mission rehearsal, and mission analysis. As the only DoD

organization tasked to enable and integrate joint warfighting capabilities at all levels, U.S. Joint Forces Command (USJFCOM) possesses an essential role of identifying the joint requirements for M&S to achieve synergy in the joint warfighting environment: USJFCOM integrates and enables M&S across the services, combatant commands, multinational and interagency partners by ensuring joint interoperability across Service systems and integrating joint enablers into the training environment.

A key component of USJFCOM's M&S capability is the Joint Live Virtual and Constructive (JLVC) Federation. The JLVC Federation is a configuration of joint and service simulations and software used to represent the joint battle space to annually support more than 20 joint training exercises and Operation Enduring Freedom mission rehearsal exercises (MRX). The JLVC Federation is USJFCOM's premier M&S enabler in support of multi-level joint training events from the strategic to tactical level, providing multi-resolution stimuli to meet the information requirements of multi-level training audiences. The command expends approximately $19M annually to provide joint M&S in support of roughly 20 combatant command exercises per year. Additionally, the Joint National Training Capability program (JNTC) allocates roughly $21M annually in support of the distribution of live, virtual and constructive (LVC) data for up to 200 service exercises. The efficiencies of distributing high fidelity M&S is great when compared to the high costs of physically relocating personnel and equipment to displaced geographic locations to participate in exercises. USJFCOM alone has saved $5M annually in travel costs.

For example, at the service level, the Navy can now certify aircraft carrier strike groups staffs using the Fleet Synthetic Training (FST) series of exercises. In the past, the culminating event for a strike group staff could only be accomplished through a live Joint Task Force Exercise (JTFEX). This staff certification can now be accomplished utilizing a synthetic environment where surface ships are linked with aviation and submarine simulators accomplishing the required operations to meet the joint exercise training standards. In many of these training events, the Strike Group is also networked to coalition simulators along with other joint assets like the Air Force Airborne Early Warning aircraft and Army Patriot Batteries. The entire audience (joint and coalition) are trained as closely as possible to how they are employed in theater. The end result of this modeled and simulated training is shorter at-sea periods, reduced wear and tear on personnel and equipment, and greater exposure to a broader array of joint capabilities.

Across all warfighting communities, simulated training advances have been significant, yet the use of advanced simulation technology has not been achieved for the training of infantry small units in close combat. State-of-the-art simulation training that is demanded and accepted as routine for aviation, armor or maritime forces, is negligible or almost non-existent on a large scale for U.S. ground forces.

Since 1945, American infantry units have suffered over 80% of our nation's military casualties. Research concludes these casualties often occur in the initial fire fights, yet very few resources have been applied to the development of realistic immersive simulation of ground operations to prepare ground troops for their first engagements with the enemy. Though the

rudimentary simulation designed for close combat currently affords units some level of challenge, it does not yet approach the level of sophistication that is commonplace and deemed essential in the other warfighting disciplines.

Today's force is engaged around the world and assigned a variety of missions confronting insurgents on the ground. The development of a close combat/infantry immersive training simulation capability is a national priority in terms of creating top-performing small units able to take advantage of joint surveillance and fire support. Dramatic advances in immersive simulation, artificial intelligence, and gaming technology must now be harnessed to bring state-of-the-art simulation to small infantry units. The immediate task is to create a prototype immersive training simulator as a means to enhance warfighter survivability, amplify exposure to joint and combined assets, improve the employment of our joint-asymmetric capabilities, and increase the overall effectiveness of small unit performance to defeat the enemy while protecting the innocent who are intentionally jeopardized by our enemies' tactics. Ultimately, casualty reduction, fewer ethical missteps, psychological resilience of our own troops and enhanced mission success rates are the goals.

The Deputy Secretary of Defense has directed funding to the Services and U.S. Joint Forces Command to support the urgent development of infantry immersive training simulators. The Future Immersive Training Environment (FITE) Joint Capability Technology Demonstration (JCTD) is a Department wide $27M effort focused on providing training capabilities that emphasize close combat tactical and ethical decision making in a simulated environment. Resource Management Decision (RMD) 700 provides $285M to USJFCOM across FY11-15 to

assist the Services with the development of immersive trainers that replicate the joint operating environment.

Prototype demonstrations of an initial system at Fort Benning and Camp Lejeune have yielded positive results for an individually worn device that provides a significant enhancement to presenting a simulated environment for individual small unit training. Spiral II of this effort will focus on a prototype mixing synthetic and physical elements to provide a simulated environment and virtual reality. This two year project has sharpened the Department's M&S efforts to enhance infantry tactical training through emergent technology. We are making progress.

USJFCOM, in partnership with Army Program Executive Office – Simulation, Training and Instrumentation (PEO-STRI) and the Fort Bragg Battle Command Training Center, recently worked with the 82nd Airborne Division to provide the 1-38 CAV with a virtual, in-theater capability to conduct mission rehearsals for convoys and high value target (HVT) operations, battle drill visualization, familiarization for new personnel, and leader certification. This M&S capability provides an in-theater mission rehearsal training capability, providing simulation for use by small unit leaders. Funding for this project is supported through the Afghanistan Rapid Data Generation Quick Reaction Fund for approximately $270K. The success of this program has led to a second request by 2-87th Infantry Battalion, 10th Mountain Division to provide the same in-theater mission rehearsal capability when the battalion deploys to Afghanistan. If positive results are achieved, we will help to rapidly expand this effort.

Throughout USJFCOM, M&S is generating real warfighting capabilities. Recent M&S projects include the Joint Integrated Persistent Surveillance (JIPS - $2.8M) which models persistent surveillance systems, complex terrain, and various surveillance missions to determine what works best; the Joint Counter Intelligence/Human Intelligence Integration (JCIHII - $112K), which models solutions to improve the timely sharing of accurate and actionable intelligence resulting from counter intelligence and human intelligence collections at tactical through national levels; the Joint Targeting Proof of Concept ($122K), which models the joint targeting process, leading to the implementation of a set of cross cutting initiatives to improve DoD's ability to support targeting needs of combatant commanders.

Declining budgets and the wide array of threats and warfighting domains will demand that M&S become a more integral part of the Department's training and readiness program. Modeling and simulation can be used to train for irregular warfare, cyberspace operations, logistics support, space control, and missile warning and defense. Today's gaming and simulation technologies afford great opportunities to create the "battle space of tomorrow," to take leaders out of their comfort zones through high fidelity gaming and realistic virtual worlds, and better prepare them for the uncertainty of battle. Wisely invested M&S resources will ensure data standardization and common infrastructure to support joint simulations. As M&S technology increases in complexity, this sharing of data and infrastructure offers the potential for cost savings.

Today's force must be balanced to effectively counter an irregular threat, without compromising our nuclear deterrence or conventional superiority. For our uncertain future, our military leaders and our forces will need to remain the most versatile in our nation's history.

M&S has proven its value in enhancing joint training, experimentation and testing needs in today's complex environment.

DEPARTMENT OF THE AIR FORCE

PRESENTATION TO THE COMMITTEE ON ARMED SERVICES
SUBCOMMITTEE ON READINESS

UNITED STATES HOUSE OF REPRESENTATIVES

SUBJECT: MODELING AND SIMULATION IN MILITARY TRAINING AND READINESS

STATEMENT OF: MAJ GEN MARKE F. GIBSON
DIRECTOR OF OPERATIONS, DEPUTY CHIEF OF STAFF FOR OPERATIONS, PLANS AND REQUIREMENTS,
HEADQUARTERS U.S. AIR FORCE

20 JULY 2010

NOT FOR PUBLICATION UNTIL RELEASED
BY THE COMMITTEE ON ARMED SERVICES
UNITED STATES HOUSE OF REPRESENTATIVES

BIOGRAPHY

UNITED STATES AIR FORCE

MAJOR GENERAL MARKE F. GIBSON

Retiring effective Jan. 1, 2011.

Maj. Gen. Marke F. Gibson is Director of Operations, Deputy Chief of Staff for Operations, Plans and Requirements, Headquarters U.S. Air Force, Washington, D.C. The directorate is responsible for policy, guidance and oversight of Air Force air, space, cyber and weather operations, training and sourcing. It is the largest directorate on the Air Staff with more than 1,840 personnel, 23 divisions and three field operating agencies, including the Air Force Operations Group, Air Force Flight Standards Agency, and Air Force Weather Agency.

General Gibson entered the Air Force in May 1978 as a graduate of the U.S. Air Force Academy. He began his career as a T-38 instructor pilot and A-10 pilot, and he has held numerous operational and staff assignments. These include military assistant to the Department of Defense Executive Secretary and Vice Director of North American Aerospace Defense Command Operations. He has commanded an operations group and a fighter wing. Prior to his current assignment he was Vice Commander, 7th Air Force and U.S. Air Forces Korea, and Chief of Staff, Air Component Command, Osan Air Base, South Korea.

General Gibson has extensive experience in combat and contingencies. He served as the aide to the Commander, U.S. Central Command Air Forces during operations Desert Shield and Desert Storm from 1990 to 1991. From 1999 to 2000, he was Director of Operations in Joint Task Force-Southwest Asia in Saudi Arabia. General Gibson also served as the Commander of the 332nd Air Expeditionary Wing, Balad AB, Iraq. The general is a command pilot with more than 3,400 flying hours in a variety of aircraft, including 1,300 hours in the A-10 and 33 combat missions in the F-16 during Desert Storm.

EDUCATION

1978 Bachelor of Science degree in economics and management, U.S. Air Force Academy, Colorado Springs, Colo.
1982 Master of Science degree in business administration, University of Northern Colorado
1983 Marine Command and Staff College, by correspondence
1984 Squadron Officer School, Maxwell Air Force Base, Ala.
1992 Air Command and Staff College, Maxwell AFB, Ala.
1993 Air War College, by seminar
1996 Master's degree in national security strategy, National War College, Fort Lesley J. McNair, Washington D.C.
2002 National Security Management Course, Syracuse University, N.Y.

ASSIGNMENTS

MAJOR GENERAL MARKE F. GIBSON

1. June 1978 - November 1978, program manager, EF-111 System Program Office, Wright Patterson AFB, Ohio
2. November 1978 - November 1979, student, undergraduate pilot training, Reese AFB, Texas
3. May 1980 - May 1982, T-38 instructor pilot, Reese AFB, Texas
4. May 1982 - May 1985, T-38 instructor pilot, Randolph AFB, Texas
5. October 1985 - October 1986, A-10 pilot, Suwon Air Base, South Korea
6. October 1986 - April 1989, flight commander and Chief of Standardization and Evaluation, Royal Air Force Bentwaters, England
7. April 1989 - June 1990, Chief of Tactics, 9th Air Force Standardization and Evaluation, Shaw AFB, S.C.
8. June 1990 - June 1991, aide to Commander, U.S. Central Command Air Forces, operations Desert Shield and Desert Storm, Southwest Asia
9. June 1991 - June 1992, student, Air Command and Staff College, Maxwell AFB, Ala.
10. June 1992 - June 1993, fighter aircraft requirements officer, Headquarters U.S. Air Force, Washington, D.C.
11. June 1993 - June 1995, military assistant to Executive Secretary, Department of Defense, Office of the Secretary of Defense, Washington, D.C.
12. June 1995 - June 1996, student, National War College, Fort Lesley J. McNair, Washington, D.C.
13. June 1996 - April 1997, Deputy Commander, 23rd Operations Group, Pope AFB, N.C.
14. April 1997 - August 2000, Commander, 347th Operations Group, Moody AFB, Ga. (July 1999 - July 2000, Director of Operations, Joint Task Force-Southwest Asia, Riyadh, Saudi Arabia)
15. August 2000 - April 2001, Vice Commander, 20th Fighter Wing, Shaw AFB, S.C.
16. May 2001 - August 2003, Vice Director of NORAD Operations, Peterson AFB, Colo.
17. September 2003 - June 2004, Commander, 332nd Air Expeditionary Wing, Balad AB, Iraq
18. June 2004 - January 2006, Commander, 354th Fighter Wing, Eielson AFB, Alaska
19. January 2006 - March 2007, Vice Commander, 7th Air Force, Osan AB, South Korea
20. March 2007 - present, Director of Operations, Deputy Chief of Staff for Operations, Plans and Requirements, Headquarters U.S. Air Force, Washington, D.C.

SUMMARY OF JOINT ASSIGNMENTS
1. June 1993 - June 1995, military assistant to Executive Secretary, Department of Defense, Office of the Secretary of Defense, Washington, D.C., as a lieutenant colonel
2. July 1999 - July 2000, Director of Operations, Joint Task Force-Southwest Asia, Riyadh, Saudi Arabia, as a colonel
3. May 2001 - August 2003, Vice Director of NORAD Operations, Peterson AFB, Colo., as a colonel

FLIGHT INFORMATION
Rating: Command pilot
Flight hours: More than 3,400
Aircraft flown: T-38, A-10, F-16, MC/HC-130 and HH-60

MAJOR AWARDS AND DECORATIONS
Defense Superior Service Medal with two oak leaf clusters
Legion of Merit with two oak leaf clusters
Distinguished Flying Cross
Bronze Star Medal
Meritorious Service Medal with oak leaf cluster
Air Medal with three oak leaf clusters

EFFECTIVE DATES OF PROMOTION
Second Lieutenant May 31, 1978
First Lieutenant May 31, 1980
Captain May 31, 1982
Major April 1, 1989
Lieutenant Colonel June 1, 1993
Colonel Jan. 1, 1998
Brigadier General Aug. 1, 2004
Major General Nov. 2, 2007

(Current as of August 2009)

The United States Air Force has been continuously deployed in support of combat operations for almost 19 years, proudly defending our nation's interests and way of life. Achieving and maintaining the readiness of our force in today's complex operating environment requires flexible training capabilities that closely replicate the conditions in which our airmen will operate. We increasingly rely on Modeling and Simulation (M&S) to meet these challenges in efficient and cost effective ways. Today's simulation provides an unprecedented level of training system integration needed to rehearse the full range of military operations in realistic and challenging environments. Our goal is to produce effective and proficient operators in the quickest and most efficient manner possible.

The Air Force has a long history of using modeling and simulation to conduct operations analysis, weapon systems test and evaluation, Command and Control (C2), and weapon systems training at the tactical, operational and strategic levels. Today, we continue that legacy by integrating air, space, and cyberspace simulation into an effective network with our joint forces and coalition and allied partners.

The Air Force has an even longer history of using simulators to train aviators, like the old Link Trainers of WWII, and has consistently improved and expanded upon that capability to include weapon system, mission, and emergency procedures training to complement live-fly training for our aviators. Today, we use simulation and system-of-systems integration to train for almost every type of mission we execute. As virtual technologies have evolved, we have expanded from simple to complex simulators, and networked Live, Virtual, and Constructive (LVC) architectures to address today's training shortfalls with emerging mission requirements. For more than thirteen years, we have championed the use of integrated Live, Virtual, and

Constructive simulator training technologies to conduct distributed mission operations connecting geographically separated units into common operating environments. Today's high fidelity simulators provide presentations which closely replicate our live environment and allow us to rehearse for specific mission requirements in high threat environments. In doing so, we are able to cost-effectively provide realistic and repeatable training not otherwise achievable. However, this high fidelity technology requires significant investment in development, acquisition and maintenance. This is especially true for the new fifth generation of weapon systems like the F-22, F-35, emerging ISR, and Cyber Operations systems where training requirements often exceed current live training capabilities.

Quantifying the potential savings in training costs provided by modeling and simulation versus live operations can be difficult to measure because of the complexity inherent in the comparison. We use modeling and simulation to complement and expand upon out live training opportunities, but it should not be viewed as a one-for-one substitute for live fly events. Investments are being made to expand upon our networked simulation capabilities to fill training gaps and provide additional training with our joint and coalition partners while adding the realism of a joint warfighting environment.

Our combat air forces include a range of Live, Virtual, and Constructive Modeling & Simulation to fully integrate Air Force and Joint Service/Coalition training, from focused qualification training to large force integrated exercises. The Air National Guard and Air Force Reserve Distributed Training Operations Center in Des Moines, Iowa, provides full mission simulator training to active and reserve component warfighters and their Army mission partners. For large force team training, Air Combat Command's Distributed Mission Operations Center

(DMOC) in Albuquerque, New Mexico, conducts Virtual Flag Training Program and mission rehearsal events with joint, large force exercise scenarios. For example, in 2009, Airborne Warning and Control System (AWACS) crews conducted 1,968 training events in Virtual Flag, and the Joint Surveillance and Targeting Attack Radar System (JSTARS) accomplished 760 training events. Our annual Coalition Virtual Flag event each September incorporates warfighters, simulators, and simulator systems from Australia, Canada and the United Kingdom.

In line with the commercial airline industry, Air Mobility Command uses full motion simulators with six-degrees of freedom providing realistic training that permits us to decrease the number of live training flights. For example, the KC-10 air refueling aircraft simulators have allowed us to decrease the number of flights required to produce a mission ready pilot. The initial qualification syllabus prior to 2005 consisted of 17 simulator lessons and nine flights. The current syllabus increases the simulator lessons to 23 and decreases flights to six. The use of FAA-certified Air Force simulators maximizes training, reduces "wear-n-tear" costs and takes fewer aircraft away from higher priority operational missions. However, we must remember that such high fidelity simulation requires significant investment—especially up front.

The advances that modeling & simulation technologies bring to readiness training have created both security and releasability challenges in the joint and coalition arenas that must be met before we can fully capitalize on the promise of networked training. Highly classified weapon system capabilities are often compartmented into different classification levels to protect mission capabilities or design features, such as stealth. This limits the integration of their simulators with other systems to reduce potential exploitation risk through intentional or accidental exposure. While technologies are available to make this integration possible, the

result may significantly degrade mission capabilities to the point of "negative training". Effective technical guards are often constructed at significant cost but with little hope of re-use, so finding a joint solution has become a priority for the defense training community and specifically for advanced Air Force systems. To meet this challenge, we have joined with the Navy and U.S. Joint Forces Command to continue joint research into establishing effective and cost-efficient solutions for networked training. This is especially important as we look for methods to safely and affordably integrate the training of fifth-generation aircraft and advanced ISR platforms. Current airspace and training range restrictions increasingly limit most aspects of live fly training. To mitigate this training limitation, the Air Force is supporting research into the ability to "inject" battlefield effects and simulated threats into live aircraft systems.

Additional efforts are underway to increase space modeling and simulation capabilities. Headquarters Air Force Space Command and the Space and Missile Systems Center (SMC) have established a vision for a single Standard Space Trainer (SST). The SST employs commercial off the shelf (COTS) systems and hardware and provides a standardized set of advanced training, instructional, and simulation capabilities. SST will be LVC compatible and connect through the DMOC-S at Schriever AFB, CO.

AFSPC has also embarked on a Chief of Staff of the Air Force (CSAF) supported effort with USSTRATCOM, USNORTHCOM, USJFCOM, Air Force Agency for Modeling and Simulation (AFAMS), and SMC to establish the All Things Space (ATS) program. ATS will deliver high fidelity space M&S to support exercises and operational training from tactical to campaign level events, operational planning, and future capabilities to ensure the DoD is capable of meeting current and future threats in space. ATS will provide persistent, distributed,

integrated space training & exercise capability that is dynamic, scalable and affordable within the Joint Environment.

Headquarters Pacific Air Forces (PACAF) uses M&S to enhance warfighter readiness. During exercises Key Resolve and Ulchi Freedom Guardian in Korea, mission crews accomplished training in their Joint Surveillance and Targeting Attack Radar System (JSTARS) simulators at Robins AFB, Georgia, while linked to the PACAF Air Operations Center and the land component on the Korean peninsula.

Modeling and simulation is increasingly being applied to air-to-ground missions. Air Force Research Laboratory created the first Joint Terminal Attack Controller Training and Rehearsal System (JTAC TRS) training capability for the JTAC community. The research program produced both a 360 degree field of view dome and a smaller (220 degree field of view) training testbed. They have been used in a variety of live, virtual and constructive events including the first-ever connection of live F-16's and virtual JTAC's. The testbeds provide an ideal environment to investigate current JTAC training methods to determine effective live versus simulation tradeoffs and associated cost savings. These innovative capabilities will be incorporated into the Joint Terminal Control Training and Rehearsal System (JTC TRS) and will help training requirements for the planned growth to 1,300 JTACs. Geographically separated JTACs, Combat Control Team air traffic controllers and close air support platforms will be able to conduct complex Joint Close Air Support (JCAS) training scenarios that include integrating with nearby ground forces.

Air Force Special Operations Command has also integrated virtual aircraft simulators and Joint Terminal Controller simulators with live and constructive forces to support operational readiness and pre-deployment training. In exercise Emerald Warrior, a Joint National Training

Capability mission rehearsal exercise, U.S. Special Operations Command (USSOCOM) linked air and ground simulators at Hurlburt Field, Florida and Camp Lejeune, North Carolina with live USMC F/A-18 fighter aircraft and ground teams on Eglin Range, Florida to conduct a typical theater mission rehearsal scenario. This enabled USAF, USMC and USSOCOM to conduct integrated joint fires tactics, techniques and procedures training at a reduced cost.

Modeling and Simulation systems are critical to the expansion and transformation of our current and future warfighter readiness. Again, in many cases it is the only way to adequately train our airmen. M&S technology should be seen as a complement, not a substitute, for live military training. While it cannot completely replace complex human interactions, M&S allows us to train, test and experiment key warfighting competencies we normally cannot accomplish through live exercises alone.

Opening Statement
RADM Frederick L. Lewis, USN (Ret)
20 July 2010

Mr. Chairman and Members of the Committee:

It is a pleasure for me to appear before you today to discuss one of America's most exciting and promising enterprises - the modeling and simulation training industry. My name is Fred Lewis, and I am the President of the National Training and Simulation Association, this country's premier organization dedicated to furthering the growth and health of this critical national asset.

Let me start by saying that simulation technologies are revolutionizing how we learn. In areas such as disaster response, emergency medicine, cultural interaction, military and law enforcement, advanced surgical procedures and predictions about complex weather systems; modeling and simulation are enabling us to prepare more quickly, more effectively and with far greater flexibility than ever before. Gone are the days when we learned from texts and then plunged headlong into the complexities of dangerous and high risk real-world situations. Now we train in virtual environments that uncannily replicate those we will face in combat, in terrorist attacks, and in the emergency room. In the last few years, we have begun a journey into virtual worlds that don't just promise to blur the distinction between simulation and reality - they will soon actually remove it.

The National Training and Simulation Association promotes the growth and use of modeling and simulation technologies through a wide variety of activities, including

scholarships and certification programs, sponsorship of extensive research, and annual events such as the recently-concluded Congressional Modeling and Simulation Expo, held in the Rayburn House Office Building with the close collaboration of the Congressional Modeling and Simulation Caucus, with which we enjoy an active and productive relationship. Our flagship activity is, of course, the annual Interservice/Industry Training, Simulation and Education Conference, or I/ITSEC, held annually in late fall in Orlando. This event, which, like the industry as a whole, is enjoying healthy growth despite an uncertain overall economy and now attracts well over 500 corporations, government and research organizations from the United States and from over 60 countries around the globe. Over one hundred research and scientific papers are presented and discussed, making I/ITSEC not only the world's largest exhibition of modeling and simulation technology, but also the world's most important annual focal point for advancement of this critical tool. With over half a million square feet of exhibit space showcasing the amazing panoply of virtual reality, modeling and simulation, I/ ITSEC is truly a phenomenal sight. As an American, I take great pride in seeing this evidence of how vibrant and creative this sector of our economy is, and what great promise it holds for our future.

During my time at the National Training and Simulation Association, I have seen the modeling and simulation industry not only grow exponentially, but undergo rapid and in some cases unexpected change. The explosion in computer processing power, which began in the last decade and which is continuing unabated, has enabled simulation training to migrate from platform trainers where single individuals interact with single

training devices--the so-called man-machine interface, into a wide variety of immersive virtual environments, including those which link multiple actors into a unified training matrix. It is becoming clear that in the not too distant future we will train with avatars, wholly immersed in a three dimensional alternative world.

Creating such environments is in fact the next great technological challenge for our industry and we are on the way to creating it. With it, among other precedent- setting applications, we will be able to immerse our warfighters in new and unfamiliar cultures, allowing them to "learn by doing", by living in a virtual Afghan village, for example. I do not believe this level of technology will be achieved while we pursue our objectives in Iraq and Afghanistan, but we will see it in the not far future, and it will play an invaluable role in many critical areas of national importance.

As to today's Modeling and Simulation Industry, I would like to underscore not only that it is important to a wide variety of different domains, but also the flexibility and agility of our industry to respond to changing requirements based on changes in the threat environment. A good example of that responsiveness was the development in Orlando, and deployment to Iraq in six months of a convoy tactics trainer. Our industry had quickly and effectively answered a critical battlefield requirement to train our soldiers and marines how to react if attacked while en-route in a convoy of trucks and other vehicles.

My confidence in the modeling and simulation industry's technological capabilities is unshakable and based on the solid evidence of creativity and innovation that I have attempted to briefly outline today. Against this promising background, however, we face two challenges that each, in very different ways, threaten to hinder what otherwise would be further dramatic progress.

The first is a bureaucratic obstacle that can be removed, I am convinced, with concerted action by all interested parties. Specifically, the Economic Classification Policy Committee (ECPC) of the Office of Management and Budget has rejected, for the third time in eight years, our applications for granting unique industrial classification codes for modeling and simulation. As we have stated in our requests, granting such stature would not only bestow deserved formal status and recognition on our industry, but would also greatly facilitate tracking of economic data pertaining to modeling and simulation, at present an elusive goal. While we have some economic data for certain geographic areas where the simulation industry enjoys a pervasive presence: Orlando, Florida; Huntsville,
Alabama, the Hampton Roads area in Virginia, and others--we have no unified picture of the industry's overall contribution to the health of the American economy, although we know intuitively that it is considerable and growing rapidly.

We intend to vigorously challenge this ruling, and call on all those with an interest in furthering the growth of the modeling and simulation community of practice to join with us. I will specifically call on the valuable support of the Congressional Modeling and

Simulation Caucus, which has taken a strong, creative lead many times in seeking proper national recognition of our industry. I will quickly formulate a request, supported by specific, persuasive arguments, to attain this long-delayed classification. The second challenge facing our industry is of a more fundamental nature. For a number of years, alarm bells have been alerting us to the widening gap between the U.S. and most other developed countries in the science and technology skills of our young citizens. Studies equating our achievement levels to those of some less developed countries, and indicating that we have made no improvements in our standing since about 1990 – have begun to focus public and private organizations upon the urgent need to re-kindle student interest in the "hard" sciences and to strengthen technology teaching in the classroom.

But raising awareness of the seriousness of our shortcomings may prove the easier task. Ahead of us lies the challenge of creating a sense of excitement and enthusiasm among our youth about the promise that technology and its opportunities offer for a lifetime of achievement and personal reward. Just as demanding is the need to provide enhanced instruction and a clear, viable path from classroom to careers. President Kennedy's challenge to reach the moon by the end of the 1960's motivated several generations of Americans to great achievement in the sciences and in engineering. What we now need in the 21st Century is a similar challenge, and I believe that modeling and simulation can be a key to that excitement.

Perhaps no other industry is more dependent on a reliable supply of first-class scientists and engineers than the modeling and simulation community. At the same time, modeling and simulation enjoys a built-in advantage in that young people have surrounded themselves with variations of simulation technology. Video games, in particular, are a type of virtual simulation, and in fact, serious games - based on video game technology - are an increasingly important component of the overall simulation training picture. But even with that kind of stimulation of the younger generation our downward trend continues.

We at NTSA have engaged in several efforts to try to reverse the trend, and while worthwhile and successful, they are only fractional and only affect the margins. We must do more to enhance STEM (science, technology, engineering and mathematics) education across the Nation. If we do not, then we will continue to see our American leadership in technology erode as other Nations eagerly assume the leadership position previously held by us.

I believe the United States must move briskly to improve the level of STEM education and to increase the number of students pursuing and graduating in the sciences if we are to remain at the technological forefront in a ruthlessly competitive world. Our continued wellbeing and even our survival as a successful nation depend upon our response to this challenge.

There are challenges ahead for my community, but in the exciting and dynamic world of Modeling and Simulation the way ahead is lit with the promise of being able to address our Nation's most vexing problems.

DISCLOSURE FORM FOR WITNESSES
CONCERNING FEDERAL CONTRACT AND GRANT INFORMATION

INSTRUCTION TO WITNESSES: Rule 11, clause 2(g)(4), of the Rules of the U.S. House of Representatives for the 111th Congress requires nongovernmental witnesses appearing before House committees to include in their written statements a curriculum vitae and a disclosure of the amount and source of any federal contracts or grants (including subcontracts and subgrants) received during the current and two previous fiscal years either by the witness or by an entity represented by the witness. This form is intended to assist witnesses appearing before the House Armed Services Committee in complying with the House rule.

Witness name: **Fred Lewis**

Capacity in which appearing: (check one)

___Individual

✔ Representative

If appearing in a representative capacity, name of the company, association or other entity being represented: National Training and Simulation Association (NTSA)

FISCAL YEAR 2010

federal grant(s) / contracts	federal agency	dollar value	subject(s) of contract or grant
-0-	-0-	n.a.	n.a.

FISCAL YEAR 2009

federal grant(s) / contracts	federal agency	dollar value	subject(s) of contract or grant
-0-	-0-	n.a.	n.a.

FISCAL YEAR 2008

Federal grant(s) / contracts	federal agency	dollar value	subject(s) of contract or grant
-0-	-0-	n.a.	n.a.

Federal Contract Information: If you or the entity you represent before the Committee on Armed Services has contracts (including subcontracts) with the federal government, please provide the following information:

Number of contracts (including subcontracts) with the federal government:

Current fiscal year (2010): none
Fiscal year 2009: none
Fiscal year 2008: none

Federal agencies with which federal contracts are held:

Current fiscal year (2010): none
Fiscal year 2009: none
Fiscal year 2008: none

List of subjects of federal contract(s) (for example, ship construction, aircraft parts manufacturing, software design, force structure consultant, architecture & engineering services, etc.):

Current fiscal year (2010): none
Fiscal year 2009: none
Fiscal year 2008: none

Aggregate dollar value of federal contracts held:

Current fiscal year (2010): -0-
Fiscal year 2009: -0-
Fiscal year 2008: -0-

Federal Grant Information: If you or the entity you represent before the Committee on Armed Services has grants (including subgrants) with the federal government, please provide the following information:

Number of grants (including subgrants) with the federal government:

Current fiscal year (2010):	none
Fiscal year 2009:	none
Fiscal year 2008:	none

Federal agencies with which federal grants are held:

Current fiscal year (2010):	none
Fiscal year 2009:	none
Fiscal year 2008:	none

List of subjects of federal grants(s) (for example, materials research, sociological study, software design, etc.):

Current fiscal year (2010):	none
Fiscal year 2009:	none
Fiscal year 2008:	none

Aggregate dollar value of federal grants held:

Current fiscal year (2010):	-0-
Fiscal year 2009:	-0-
Fiscal year 2008:	-0-

WITNESS RESPONSES TO QUESTIONS ASKED DURING THE HEARING

JULY 20, 2010

RESPONSE TO QUESTION SUBMITTED BY MR. FORBES

General GIBSON. The Air Force relies on modeling and simulation (M&S) for predicting the structural integrity and reliability of its fleet. This is critical since many aircraft remaining in the Air Force inventory are far exceeding their design service life and being operated at more severe levels than those for which they were designed. To keep the fleet flying, numerous aircraft systems and major components require replacement, such as wings and airframe structural elements.

In response to numerous fatigue-related structural failures in the 1950s, the Air Force established the Aircraft Structural Integrity Program (ASIP) in 1958. ASIP established a systems engineering framework to develop, certify, and maintain the structure of an air vehicle with the least possible economic burden throughout its service life and is required on all aircraft weapon systems per Air Force Policy Directive 63–1 with requirements documented in Military Standard 1530C.

The Aircraft Structural Integrity Program has proven instrumental in controlling the loss of aircraft due to structural failure. In fact, the probability of loss due to structural failure is now approximately 50 times lower than all other causes. Since ASIP's inception in 1958, M&S has been integral to achieving this demonstrated structural reliability. Structural models (e.g., finite element models) and analytical tools are widely used to predict the aircraft structure strength, stiffness, service life, etc. During development, models are calibrated using data from ground and flight testing. During sustainment, models are updated to reflect configuration changes and are calibrated through additional ground and flight testing when required. Structural models are also updated and refined with real world usage and maintenance data. In addition, structural models are updated to reflect unanticipated events such as the November 2007 crash of a 25-year old F–15C. [See page 17.]

QUESTIONS SUBMITTED BY MEMBERS POST HEARING

JULY 20, 2010

QUESTIONS SUBMITTED BY MR. ORTIZ

Mr. ORTIZ. How might the Department of Defense serve as a national leader in the pre-emptive use of modeling and simulation to develop responses to various national crises scenarios?

Admiral BURKE. The Department of Defense conducts joint and collaborative analyses, synchronized with the Planning, Programming, Budgeting and Execution (PPBE) System, to support the development and evaluation of defense strategy. This is accomplished through the Analytic Agenda initiative which develops the processes and products—including planning scenarios, concept of operations, and analytic baselines—that form the basis for strategic analysis and assessments. Modeling and simulation is used in developing and assessing the Analytic Agenda, its planning scenarios, and in the detailed follow-on analyses and assessments used for the PPBE.

The majority of the planning scenarios are contained within the analytic agenda and focus on potential future crises where the military is expected to be the lead agency. These scenarios include full-scale warfare campaigns; foundational defense activities such as presence and engagement; defense of the homeland; and irregular warfare and security operations—all of which leverage modeling and simulation.

Several national crises scenarios, which leverage modeling, are focused on crises where the Department of Defense supports other departments and agencies. For example, the Enhanced Protective Posture (EPP) scenario examines a variety of potential homeland security concerns that arise in conjunction with overseas contingencies. In this effort, modeling assists in determining how to prepare for, mitigate, and respond to those concerns. The EPP includes the Assistant Secretary of Defense for Homeland Defense (ASD–HD), National Guard Bureau (NGB), Coast Guard, as well as the normal DOD analytic agenda participants. Other examples that leveraged modeling and simulation which supported inter-agency crises scenarios include the Homeland Defense Analytic Baseline which examined a range of natural and man-caused homeland crises as well as Defense Support to Civil Authorities for Consequence Management (DSCA–CM) studies.

Thus the Department of Defense is active in using models and simulations in the pre-emptive planning and assessment of a variety of national crises scenarios. These efforts within the Department of Defense could be used as a template for other departments and agencies to follow and perhaps form the basis for collaborative interagency planning and crises response.

Mr. ORTIZ. How does the expansion and technological advancement of surface ship and aviation training simulators fit within each of the department's energy conservation goals?

Admiral BURKE. The use of surface ship and aviation training simulators facilitates the reduction of fuel consumption. Consumption reduction is critical to the achievement of Navy energy goals. Navy is drafting a plan outlining the competencies that can be effectively accomplished within the training simulator environment. Simulation use is being assessed for current levels of utilization to ensure that available simulators are being used to the maximum extent possible. Additionally, fidelity assessments will ensure that each module is an effective reflection of "real-time" operating environments. Navy recognizes that maximizing simulation use will require significant culture change. However, given the technology that is currently available, Navy is confident that increased simulator use will help meet the Navy's fuel consumption reduction goal.

One recent example of the expansion and technological advancement of Navy simulation is the MH–60R Seahawk simulator installed April 13, 2010, at Naval Air Station (NAS) Jacksonville, the first of its kind on the East Coast. The MH–60R Seahawk simulator was also approved to support Helicopter Sea Combat Wing U.S. Atlantic Fleet in training pilots. The ability of the new simulator to create multiple training environments and situations will enhance readiness and enable MH–60R Seakhawk pilots to complete a greater percentage of training requirements in the simulator, reducing fuel consumption and contributing to the Navy's energy conservation goals.

Mr. ORTIZ. In your opinion, does the existing governance in the DOD maximum M&S investments to enhance readiness? If not, what changes can be made to improve the management structure to add value and increase return-on-investment?

Admiral BURKE. The existing DOD and Navy Modeling and Simulation governance is designed to support the effective generation of Navy units and battle groups ready to support the Combatant Commanders. DOD, working with the Combatant Commanders and individual Services, has developed the Joint National Training Capability which provides a standard infrastructure to support interservice and interagency training while remaining flexible enough to respond to Service and Community specific needs. While interoperability might potentially be increased by more central authority, the responsiveness to the end-user, i.e., Service and Community specific needs, may be reduced. The current, flexible and cooperative approach strikes an appropriate balance for all.

Mr. ORTIZ. What is the relationship between the M&S industry and the DOD? Does industry have a clear demand signal for the types of M&S capabilities DOD is seeking to improve readiness?

Admiral BURKE. We believe industry is keenly aware of DOD M&S needs and requirements for Readiness. Individual programs work closely with vendors to ensure system level requirements are understood, and at a broader, enterprise level, the core technology and standards have been adopted for at least the last four years. We are focused on our need to ensure the ability of the government to exercise M&S building blocks and achieve reuse where appropriate. We continue discussions in multiple venues with our industry partners to move toward a more open, standards-based environment to facilitate integration and reuse of M&S while taking into account industry's sensitivities to sharing products across industry partners.

One such venue is the annual Interservice/Industry Training, Simulation and Education Conference which provides an opportunity for significant interchange and dialogue between government and industry. The 2009 conference had approximately 19,000 registrants, roughly half of which were government. This venue provides a technology showcase that drives discussion and ideas, as well as both government and corporate leadership panel discussions and sessions to review subject matter experts' papers on all our requirements, goals and needs of the community.

Mr. ORTIZ. What led the Navy to recognize that it needed accredited models for determining its readiness resourcing requirements? What contact has the Navy had with the other services about adapting the Navy's models to their requirements? Has Military Sealift Command approached the Navy about adapting the readiness models for its own use?

Admiral BURKE. The Navy's Performance Pricing Model initiative was started in 2003 after Resource Sponsors and Budget Submitting Offices were unable to: (1) relate desired readiness outputs to specific funding levels, and (2) clearly articulate the impact of budget reductions to Fleet Readiness due to a lack of clearly defined output metrics.

The purpose of the Performance Pricing Model initiative is to provide senior Navy leadership quantitative tools that would allow them to have confidence in the requirements being submitted for funding as well as visibility in how that funding requirement was developed, the readiness risk associated with not funding to that requirement, and/or at various funding at levels. By shifting to a process where the elements of Fleet Readiness can be quantified in a modeling process the leadership debate shifts away from a pure resource level discussion to a more productive conversation of the risk associated with each output level which can then be tied to the overall planning and programming process.

Mr. ORTIZ. What contact has the Navy had with the other services about adapting the Navy's models to their requirements?

Admiral BURKE. There have been numerous readiness model briefings by Navy personnel to DOD and other service personnel. Recently the Flying Hour Program Team briefed USAF personnel on the Flying Hour model/methodology and readiness metrics. On 12 August, the Aviation Depot Maintenance Team briefed representatives from the USAF on the Aviation Depot Maintenance models and requirement determination. We have also routinely briefed members of the OMB Staff on our Readiness models.

Mr. ORTIZ. Has Military Sealift Command approached the Navy about adapting the readiness models for its own use?

Admiral BURKE. While MSC and Navy operations have significant differences, many similarities in ship material readiness modeling exist. Both have maintenance, fuel, parts and other operational requirements in common. In an effort to take advantage of these similarities and find efficiencies in operations, there has been an ongoing exchange of information and expertise between MSC and the Navy. MSC participates in the Navy's Fleet Readiness Enterprise, an initiative to improve

understanding of business practices to better manage the efficient and effective production of current readiness and future capability. MSC also utilizes established models from the commercial maritime industry, and shares its experience in this area. Currently there is no formal program for adapting Navy readiness models for use by MSC.

Mr. ORTIZ. What type factors or events would require you to modify the readiness models? How quickly can the models respond to changing operational requirements?

Admiral BURKE. Typical factors or events that require changes to the readiness model inputs include changes in:

- Global Force Management Schedule
  - Presence & Surge requirements
- Force Structure
  - Number of ships and airplanes by Class and Type Model Series
- Pilot crew seat ratio (required number of pilots per aircraft)
  - Homeport assignments
  - Flight Student Training requirements
- Class/Type Model Series Maintenance Plans
  - Maintenance schedules
- Fleet Response Training Plan (FRTP) requirements
  - Basic and Intermediate Phase steaming day requirements
  - Training and Readiness Matrix requirements
- Cost data:
  - Labor cost
  - Material cost
  - Fuel cost
  - Escalation (inflation) guidance

Mr. ORTIZ. How quickly can the models respond to changing operational requirements?

Admiral BURKE. There is a virtually unlimited capacity to produce model variations based upon "what if" scenarios of OPTEMPO and FRP/Ao configurations. Adaptation of the models to scenarios that do not require significant changes in force structure or operational practices is relatively easy. Adaptation of the models to scenarios that require significant force structure changes or assume different operating practices are significantly more difficult.

Mr. ORTIZ. How might the Department of Defense serve as a national leader in the pre-emptive use of modeling and simulation to develop responses to various national crises scenarios?

General LAYFIELD. DOD uses modeling and simulation to develop, refine, and adjust response plans for a multitude of national crisis scenarios. These efforts account for the complex nature of the operating environment and challenges of integrating with a full range of mission partners. These capabilities are currently used to support interagency and multinational exercises and experimentation. Given DOD's unique ability to create complex scenarios supported by modeling and simulation, it is ideally suited to serve as the national lead, if so designated.

There are some areas where DOD is already using modeling and simulation to support our Inter Agency partners. For example, DOD's Joint Knowledge Online (JKO) is an online training capability that continuously and rapidly adapts to meet emerging training needs by leveraging simulation technology. The Small Group Scenario Trainer (SGST) application is a JKO-hosted, Web-based exercise application for multiplayer, small group teams, cells and battle staff training exercises. The system uses interactive capabilities to teach creative thinking skills, addressing problems encountered during virtual, mission-based, simulated scenarios. Most recently, U.S. Southern Command (USSOUTHCOM) teamed with JKO to create two SGST scenarios that provided training in a Humanitarian Assistance/Disaster Relief (HA/DR) environment.

Mr. ORTIZ. How does the expansion and technological advancement of surface ship and aviation training simulators fit within each of the department's energy conservation goals?

General LAYFIELD. Surface ship and aviation simulators are an important component of the military services' training regimen. Because the military services have primary responsibility for surface ship and aviation training simulation, they are appropriately positioned within the Department of Defense's energy conservation efforts. Accordingly, we have contacted my colleagues within the U.S. Army, U.S. Air Force and U.S. Navy to assist in answering this question and will report back to you upon receiving their inputs.

U.S. Air Force: HQ USAF/A3/0—Operations, Plans and Requirements

Given that the Air Force is the largest user of fossil fuels within the DOD, it is paramount for us to continually look towards capitalizing on M&S tools to ensure our requirements for both aircraft and training simulators are in step and complement one another. We continue to make great strides in level of fidelity of our immersive combat trainers and we have found several ways in which training can be accomplished in simulators or with simulation to reduce the energy consumption footprint. Examples include:

- In 2009, Airborne Warning and Control System (AWACS) crews conducted 1,968 training events in Virtual Flag, and the Joint Surveillance and Targeting Attack Radar System (JSTARS) accomplished 760 training events in their mission simulators.
- No fuel is used during the check-out of a C–17 copilot. All of his training is accomplished in the schoolhouse using immersive tools such as simulations so that his first sortie in a C–17 is actually transporting personnel and materiel in support of our world-wide operations.
- In line with the commercial airline industry, Air Mobility Command uses full motion simulators with six degrees of freedom providing realistic training that permits us to decrease the number of live training flights. KC–10 air refueling aircraft simulators have allowed us to decrease the number of flights required to produce a mission ready pilot. The initial qualification syllabus prior to 2005 consisted of 17 simulator lessons and nine flights. The current syllabus increases the simulator lessons to 23 and decreases flights to six.

We will continue to evaluate which tasks must be accomplished in the cockpit versus which can be completed in simulators to ensure the training and readiness of our forces is not compromised. With continued advancements of high fidelity, immersive simulators, we will be able to train for additional mission tasks. The use of mission certified simulators reduces fuel consumption by shifting the balance between live and simulated flight with the objective of producing combat capable aviators through maximum, cost-effective training.

U.S. Army: HQ USA/G–8—Programs

The Army's increased use of aviation simulators has led to energy conservation. The task of maintaining the proficiency of experienced and trained pilots is a necessary task that would consume many more gallons of fuel if not for the use of aviation simulators. Pilots require an annual robust training program that uses both live and virtual methods to maintain proficiency.

The table below is the FY10 HQDA G–3/5/7 Aviation Directorate estimate of fuel cost avoidance due to simulation use. Lastly, the Army did not program to purchase fuel for live flight training in FY10 due to simulator use.

	Flight Simulator Fuel Cost Avoidance
Army (-) USAACE	$61.9M
USAACE	$37.3M
Army Total	$99.2M

U.S. Navy: HQ USN/N–4—Material Readiness & Logistics

The use of surface ship and aviation training simulators facilitates the reduction of fuel consumption. Consumption reduction is critical to the achievement of Navy energy goals. Navy is drafting a plan outlining the competencies that can be effectively accomplished within the training simulator environment. Simulation use is being assessed for current levels of utilization to ensure that available simulators are being used to the maximum extent possible. Additionally, fidelity assessments will ensure that each module is an effective reflection of "real-time" operating environments. Navy recognizes that maximizing simulation use will require significant culture change. However, given the technology that is currently available, Navy is confident that increased simulator use will help meet the Navy's fuel consumption reduction goal.

One recent example of the expansion and technological advancement of Navy simulation is the MH–60R Seahawk simulator installed April 13, 2010, at Naval Air

Station (NAS) Jacksonville, the first of its kind on the East Coast. The MH–60R Seahawk simulator was also approved to support Helicopter Sea Combat Wing U.S. Atlantic Fleet in training pilots. The ability of the new simulator to create multiple training environments and situations will enhance readiness and enable MH–60R Seahawk pilots to complete a greater percentage of training requirements in the simulator, reducing fuel consumption and contributing to the Navy's energy conservation goals.

Mr. ORTIZ. In your opinion, does the existing governance in the DOD maximum M&S investments to enhance readiness? If not, what changes can be made to improve the management structure to add value and increase return-on-investment?

General LAYFIELD. The Office of the Under Secretary of Defense for Acquisition, Technology and Logistics (USD AT&L) is the designated focal point for coordinating all matters related to DOD modeling and simulation. USD AT&L has established a Modeling and Simulation Steering Committee which is the centralized organization to coordinate and synchronize efforts across the DOD. This committee, working with the designated communities of interest within DOD, develops a Modeling and Simulation Corporate and Crosscutting Business Plan. That plan guides the investment and management priorities for DOD modeling and simulation efforts, fostering coordination of the Services, as well as other communities.

As the Secretary of Defense recently articulated, the DOD must continue to align itself and refine its processes to improve efficiency. Within the area of modeling and simulation there may be room to improve the coordination and establishment of a DOD-wide approach to further reduce duplicative efforts and increase synergy through collaborative and transparent business processes, incentivizing Services to deliver "born joint" models and simulations.

Mr. ORTIZ. What is the relationship between the M&S industry and the DOD? Does industry have a clear demand signal for the types of M&S capabilities DOD is seeking to improve readiness?

General LAYFIELD. DOD components participate in forums such as the Interservice/Industry Training, Simulation and Education Conference, MODSIM World, Simulation Interoperability Workshop, Advanced Distributed Learning Implementation Fest and the International Training and Education Conference. DOD does this to demonstrate its capabilities; collaborate on challenges; and solicit partnership opportunities with industry, academia and international partners. DOD elements also author articles on initiatives and challenges in publications such as Military Simulation and Training and Military Training Technology magazines to communicate to industry. These forums have enabled positive engagement and brought together subject matter experts across the community to address readiness issues as related to modeling and simulation (e.g., small unit immersive training, human social cultural and behavior modeling).

Mr. ORTIZ. How does JFCOM collect feedback from users of your virtual/simulated training regarding its realism and effectiveness? How long does it take to implement changes that such feedback might produce?

General LAYFIELD. USJFCOM collects feedback from combatant commands on the realism and effectiveness of its virtual/simulated systems by conducting event after action reviews at the conclusion of each training event, as well as staff assistance visits in theater approximately 90 days after the headquarters is deployed. USJFCOM also has event surveys which are conducted at the end of each event, which include specific questions on how the modeling and simulation systems performed in support of combatant command goals and training requirements. USJFCOM also conducts a series of conferences with the combatant commands and Services to gather joint training related modeling and simulation requirements. Required changes to the suite of modeling and simulation systems can be delivered in days or weeks, if identified as a critical need, but normally updates are provided on a semi-annual software release cycle, which has saved money for USJFCOM and its service partners, while also reducing the risk of systems or database failures.

JKO Joint Courseware Facilitators (JCF) are key contributors to the operational relevance of courses and exercise support development for JKO. JCFs work directly with the exercise Observer/Trainers to coordinate JKO support for OIF and OEF Mission Rehearsal Exercises and content for online courses. The JCFs attend MRX planning conferences with the Observer/Trainers in order to capture ever-changing and up-to-date JKO courseware content that originates from deployed or soon to deploy JTF headquarters, identifying ways in which JKO can be integrated with early exercise planning.

Mr. ORTIZ. How might the Department of Defense serve as a national leader in the pre-emptive use of modeling and simulation to develop responses to various national crises scenarios?

General GIBSON. The Department of Defense already serves as a national leader in the pre-emptive use of modeling and simulation to develop responses to various national crises scenarios. In the Air Force, we do this through the use of constructive simulations such as Air Warfare Simulation (AWSIM), Information Operations Suite (IOS) and Air Force Synthetic Environment for Reconnaissance and Surveillance (AFSERS). Additionally, we federate with other DOD Joint simulations currently sponsored by JFCOM, the Navy, the Army and others creating a joint environment that shows the proper representation of Air, Space, Naval and Land power that can be, and are, used to train for humanitarian crisis at home or abroad. The command and control tools we use to prepare our staffs for major crises during a large scale exercise can also be used to support national crises scenarios at varying levels and intensity. As a department, we do this around the world, at COCOM sponsored events such as Austere Challenge in EUCOM and Ulchi Freedom Guardian in USFK. In preparing for defense of the United States, the DOD and its accredited Joint Task Force Commanders and Combatant Commanders are uniquely prepared to respond in case of national crises at home and abroad. Modeling and simulation is a powerful enabler that allows us to train to a variety of national crises, at varying intensities, to assure the DOD is prepared for any contingency it is called to support. That robust training prepares not only DOD, but other Inter-Agency personnel, to assure trained, certified personnel who have experienced the pressures and challenges of national emergencies.

Mr. ORTIZ. How does the expansion and technological advancement of surface ship and aviation training simulators fit within each of the department's energy conservation goals?

General GIBSON. Given that the Air Force is the largest user of fossil fuels within the DOD, it is paramount for us to continually look towards capitalizing on M&S tools to ensure our requirements for both aircraft and training simulators are in step and complement one another. We continue to make great strides in level of fidelity of our immersive combat trainers and we have found several ways in which training can be accomplished in simulators or with simulation to reduce the energy consumption footprint. Examples include:

- In 2009, Airborne Warning and Control System (AWACS) crews conducted 1,968 training events in Virtual Flag and the Joint Surveillance and Targeting Attack Radar System (JSTARS) accomplished 760 training events in their mission simulators.
- In line with the commercial airline industry, Air Mobility Command uses full motion simulators with six-degrees of freedom providing realistic training that permits us to decrease the number of live training flights. KC–10 air refueling aircraft simulators have allowed us to decrease the number of flights required to produce a mission ready pilot. The initial qualification syllabus prior to 2005 consisted of 17 simulator lessons and nine flights. The current syllabus increases the simulator lessons to 23 and decreases flights to six.

We will continue to evaluate which tasks must be accomplished in the cockpit versus which can be completed in simulators to ensure the training and readiness of our forces is not compromised. With continued advancements of high fidelity, immersive simulators, we will be able to train for additional mission tasks. The use of mission certified simulators reduces fuel consumption by shifting the balance between live and simulated flight with the objective of producing combat capable aviators through maximum, cost-effective training.

Mr. ORTIZ. In your opinion, does the existing governance in the DOD maximum M&S investments to enhance readiness? If not, what changes can be made to improve the management structure to add value and increase return-on-investment.

General GIBSON. The current governance structure in DOD is effectively used to assure M&S investments used to enhance readiness are leveraged across the Services. The Air Force has many agreements with the Army to assure our simulations are integrated to assure the best possible training for our combat forces. The constructive simulations federated within the JFCOM exercise program are adding valued support to our COCOM command and control exercises while eliminating duplication of effort.

The Services have cooperated in integrating many of our virtual simulators to assure an immersive training environment utilizing the latest technologies available on the battlefield. The Joint Terminal Attack Controller (JTAC) training the Air Force does in concert with the Brigade Combat Teams (BCT) of the Army assures experienced personnel are deployed in support of OEF. That training assures our JTACs are proficient on the latest battlefield procedures, equipment and rules of engagement prior to deployment. The success of that program is a testament to the cooperation in DOD to maximize M&S investments across the Services.

The Joint Capabilities Integration and Development System (JCIDS) is currently processing the Enterprise Architecture for Live, Virtual and Constructive Environments (EA–LVCE) effort. This Joint program, led by the Air Force, will continue to build on the previous M&S investments. The continued Congressional support of DOD M&S integration efforts will help ensure the readiness and combat capability of all our DOD forces.

Mr. ORTIZ. What is the relationship between the M&S industry and the DOD? Does industry have a clear demand signal for the types of M&S capabilities DOD is seeking to improve readiness?

General GIBSON. Industry deserves a good understanding of the DOD requirements and that should be a priority of all acquisition organizations. Within the Air Force, we have periodic "Industry Days" where our acquisition community addresses the anticipated future requirements with its industry partners. There are other events where the Services join together to present their needs to industry in open forums and the Services are available to answer questions from industry both as a group and in smaller settings with more limited participation.

DOD also has a need for industry to provide information on the state of technology in the private sector. We continue to strengthen and foster that integration, as the Air Force regularly receives updates on the state of M&S as it affects the virtual-constructive technologies and the Distributed Mission Operations that the Air Force relies on for training its combat forces. We incorporate those technologies as appropriate to meet training requirements.

Mr. ORTIZ. What is the practical impact of OMB's rejection of the unique industrial classification code? How is this affecting industry's ability to bring greater modeling and simulation capability to the Department of Defense?

Admiral LEWIS. The repeated rejection of our proposal to create new NAICS codes for modeling and simulation has a direct negative impact on our industry and community of practice in a number of areas. Firstly, it greatly impedes, if not stifles, any ability to quantify the considerable and growing contribution the modeling and simulation industry is making to the national economy. We know, for example, that modeling and simulation is a commanding economic and technological presence in areas such as Orlando and Hampton Roads, Virginia, as well as in a growing number of other centers around the country. Creation of NAICS codes for M&S would allow us, for the first time, to measure the economic contribution being made by our industry on a nationwide scale—a measurement that would be vital to public understanding of the significance of this technology to our present and future. Such recognition would also enable DOD to gain an understanding of the importance, growth and health of modeling and simulation as a component of overall industrial support of national defense. Understanding of modeling and simulation as an industrial component of DOD support would enable more accurate estimations of the value of its contribution to be made, in the context of comparison with other elements of readiness.

Mr. ORTIZ. How might the Department of Defense serve as a national leader in the pre-emptive use of modeling and simulation to develop responses to various national crises scenarios?

Admiral LEWIS. In my view, the Department of Defense is already playing a significant national leadership role through its use of modeling and simulation in a number of critical national security areas. In recent years, for example, we have witnessed DOD harnessing M&S to address the challenges of COIN and other asymmetric threats. Through synthetic, immersive environments, our warfighters are now exposed to training, which, with ever increasing fidelity, mimics those situations they will face in Iraq, Afghanistan and other potentially hostile environments.

This ability to create convincing synthetic battlespaces for counterinsurgency warfare training is a comparatively recent development, and testimony to the flexibility and adaptability of the modeling and simulation industry in response to rapidly shifting DOD training requirements.

Even more recently, we have witnessed heightened awareness of the grave threat to our national infrastructure posed by cyber aggression. The Department of Defense, along with other national security agencies, is utilizing simulation technology—in particular, constructive simulations—to depict large-scale cyber attacks against elements of our national energy grid, satellite and internet communications and other critical components of our infrastructure critical to continued functioning of our national security apparatus.

Turning to the Defense Department's role in responding to natural disasters, again we see a variety of simulation training regimes in play. We can now replicate disaster consequences with great fidelity, enabling elements of DOD to design and test responses to ensure maximum effectiveness. This translates directly into amelioration of human suffering and more rapid recovery.

In all these areas, the Defense Department is playing and will continue to play a leading role, having pioneered the use of simulation training technologies in the first place. I think it is important to note, however, that DOD must be careful to integrate its efforts where appropriate with those of other agencies involved in national security enhancement, such as DHS and the civilian intelligence community, to maximize the effectiveness of our overall efforts to prepare the nation for events we all hope will not occur.

Mr. ORTIZ. How does the expansion and technological advancement of surface ship and aviation training simulators fit within each of the department's energy conservation goals?

Admiral LEWIS. Simulator training on all platforms, be they surface ships, aviation, or land systems, contributes directly and measurably to DOD energy savings, as well as savings in other critical areas. The "man-machine" training interface is now a very mature technology, with simulation very closely replicating the sights, sounds and feel of the real thing. This fidelity allows these virtual environments to supplant, to a great extent, live training. Each hour thus spent in a simulator is an hour's fuel saved, as well as lubricants, and even use of land, in the case of surface vehicles. But simulation training's benefits extend even further. Simulation dramatically reduces wear and tear on our increasingly taxed equipment, as well as its "down time" and even personnel savings, as less maintenance means fewer man hours dedicated to turning wrenches. So—simulation training contributes directly to reductions in both the Operations and Maintenance and the Personnel accounts—savings that can be redirected to other critical DOD budget categories such as RTD&E and procurement.

Mr. ORTIZ. In your opinion, does the existing governance in the DOD maximum M&S investments to enhance readiness? If not, what changes can be made to improve the management structure to add value and increase return-on-investment?

Admiral LEWIS. Until fairly recently, I sensed some reluctance in some DOD sectors to recognize the full potential of modeling and simulation to contribute to economies and efficiencies in important areas. This is rooted, I believe, in reservations about the payback of time spent training in artificial environments and away from the "real thing". Now, this reticence is being reduced by the undeniable attributes of simulation training in many areas. But—reservations remain in some important areas. Our member corporations point out, for example, that some DOD elements have yet to embrace as fully as they might the use of simulations in MOUT environments, preferring to rely on live training to prepare warfighters. This reluctance follows the pattern of lag between the maturation of simulation capabilities in given environments and the full realization of their utility in that context on the part of DOD operators. It has only been in the last several years that M&S has reached the point that it can play a useful role in small unit training, and therefore we are again seeing a gap between attainment of this capability and its full utilization by DOD. Several of our corporate members are ready and able to provide such environments, but are waiting for DOD elements to provide major impetus to this capability.

Mr. ORTIZ. What is the relationship between the M&S industry and the DOD? Does industry have a clear demand signal for the types of M&S capabilities DOD is seeking to improve readiness?

Admiral LEWIS. In general, our corporate membership thinks that DOD requirements—the "demand signal"—are usually clear, realistic and conform to industry capabilities. The problem lies with the contracting cycle, which is viewed as far too drawn out and cumbersome. This of course touches on the wider issue of acquisition reform, which is being properly accorded priority attention within the defense establishment. Our membership reports that, by the time the contractual exercise has run its course, in many cases the original requirements have been rendered obsolete by advancing technology and inherently involve too many corporate resources to satisfy. In addition, our membership reports that DOD needs to be willing to contract for longer periods—for ten years at least, rather than the typical five. After a contract is finally let, it takes the winners some time to get up to speed on the requirements—a period during which disproportionate resources are dedicated. Once the work settles into a mutually satisfactory pattern that brings on economies of scale for the producer, the contract typically has little more time to run, often reducing profit margins still further after the initial out of pocket expenditures during the protracted contracting cycle. Some of our members note that their international customers typically contract for much longer periods, realizing that a given system will be in the inventory for decades, and the need for training on that system will therefore exist for a long time period. While there is some merit in the inherent flexibility built into shorter contractual timeframes, this appears to be largely negated by the factors cited by our membership.

The OMB assertion that modeling and simulation is a "specialized regimen" and that the attributes of the industry—production of simulators, elaboration of software—are separate and distinct activities, not components of an industrial whole—is patently false. Such reasoning could be applied to any high-tech industry. Symptomatic of the illogic of the Economic Classification Policy Committee is the fact that the latest judgment is based on guidelines elaborated in 1992. We submit that stipulations of nearly two decades ago are wholly inadequate to the classification of most high technology industries that have exploded onto the scene in the intervening years.

QUESTIONS SUBMITTED BY MR. WITTMAN

Mr. WITTMAN. If carried out, how would the Defense Business Board recommendation to eliminate Joint Forces Command impact modeling and simulation efforts underway or planned within DOD?

General LAYFIELD. No decisions have been made about how functions will transition based on the Secretary of Defense's decision to disestablish USJFCOM. The current Unified Command Plan assigns USJFCOM the responsibilities to lead the development and operation of joint training systems and architectures, develop new concepts, test them through experimentation and, in collaboration with other combatant commands, services and agencies, recommend solutions to better integrate joint and combined warfighting capabilities. These responsibilities require the development, integration and sustainment of a joint modeling and simulation environment for training and experimentation. The joint modeling and simulation training environment supports force preparation for deployment to Iraq, Afghanistan, and the Horn of Africa, readying combatant command staffs and joint task force headquarters. This training addresses command and control of joint operations; Service tactical level units executing Joint tasks; and preparing individual augmentees to join a deployed joint staff. In concert with Office of the Secretary of Defense, the services and coalition partners, USJFCOM currently develops and maintains interoperability standards and protocols for Joint training systems in order to integrate partner simulations into a collective/seamless joint training environment. The joint modeling and simulation experimentation environment is used to address warfighter challenges submitted by the combatant commanders and services, focusing on the most pressing challenges and issues. USJFCOM also integrates requirements and facilitates development efforts across the combatant commands and services for modeling and simulation in order to replicate the evolving joint operating environment. USJFCOM is also currently chartered to provide an integrating role across the Services training modeling and simulation programs in order to moderate and facilitate the Joint requirements, and design solutions across and with the Services.

OSD would ensure the proper transition of the modeling and simulation functions currently performed by USJFCOM if the disestablishment action is executed.

Mr. WITTMAN. What advances in modeling and simulation has Joint Forces Command contributed to?

General LAYFIELD. USJFCOM develops and maintains an all Service Joint modeling and simulation training federation, integrating joint, inter-agency and service models to create a seamless joint training environment. When tasked to address deficiencies in the Joint Simulation System (JSIMS) program, USJFCOM developed a federation of models that addressed JSIMS requirements. This was accomplished through sound systems engineering practices, with service collaboration, and at a fraction of the cost of the JSIMS program.

USJFCOM also develops, integrates, and sustains both the Joint Theater Level Simulation (JTLS) system and the Joint Live Virtual Constructive (JLVC) federation, which provided training support to 16 separate combatant command events in FY10, and multiple Multinational and Service led training events. These unique modeling and simulation systems have allowed combatant commands to analyze courses of action and provide training in preparation for potential operation plans (OPLANS) and contingency plans (CONPLANS). These systems have also allowed for expanded training with partner nations and with other DOD Service training programs.

DOD's Joint Knowledge Online (JKO), managed by USJFCOM, is an online training capability that continuously and rapidly adapts to meet emerging training needs by leveraging simulation technology. Two simulation-based training applications available via JKO in 2010 are the Virtual Cultural Awareness Trainer (VCAT) and the Small Group Scenario Trainer (SGST). VCAT uses advanced learning techniques to help students quickly and efficiently develop operational cultural knowledge, and acquire cultural skills. As previously described, the SGST application for scenario-

simulating training exercises is a JKO-hosted, Web-based exercise application for multiplayer, small group teams, cells and battle staff training exercises. The system uses interactive capabilities to teach creative thinking skills and address problems encountered during virtual sessions using mission-based, simulated scenarios.

JKO is developing two use cases for the USJFCOM Joint Advanced Concepts Division's NEXUS Virtual World capability. NEXUS is a collaborative project between the Defense Acquisition University (DAU), the Army Research and Development Command (RDECOM), Joint Advanced Distributed Learning Co-Lab (JADL Co-Lab) and Engineering and Computer Simulations (ECS). It is avatar-based, synchronous classroom training for government users. The overarching goal is to give user's access to a blended curriculum that uses virtual, avatar-based environments, providing both synchronous and asynchronous learning opportunities that can be integrated with JKO. NEXUS enables key virtual world instructional and functional capabilities, including student and classroom management, media sharing, and voice/text communications, linking to external content and other features.

USJFCOM, in conjunction with the Services and Agencies conducts Joint Concept Development and Experimentation (JCD&E) for the DOD, developing the synthetic environments within which assessments are made to determine the viability of the numerous concepts and solutions that address the Warfighter Challenge defined by COCOMs and Services. These synthetic environments are critical to forming the data required to support analytic rigor—essential for effective JCD&E. USJFCOM has been successful in driving change within the DOD in the form of improved technical and operational architectures, new tactics, techniques and procedures, and materiel solutions, enabling the current and future joint warfighter. USJFCOM developed a simulation environment capable of scaling more than 10 million entities to enable experimentation within large population centers, leveraging supercomputers capacity provided by the DOD High Performance Computing Modernization Program (DOD HPCMP).

USJFCOM has provided the initial test environment for modeling and simulation initiatives within DOD, such as the evolution of protocol which enables the federation of more than 40 different simulations into a singular joint warfighting environment (known as the High Level Architecture or HLA).

USJFCOM routinely supports deployed combatant command and NATO efforts to "reach back" to technical modeling and simulation capabilities and analytic support. USJFCOM was the first organization to implement those capabilities, by examining the impact of a region's political and economic systems, as well as culture, infrastructure and information systems. It also addresses how warfighters might influence those regional systems through diplomatic, informational, military and economic actions in order to achieve combatant command objectives.

USJFCOM habitually uses and improves upon the best modeling and simulation capabilities produced by the services as well as agencies such as the Defense Threat Reduction Agency (DTRA), producing and providing environments rich in joint context for joint training and experimentation.

Mr. WITTMAN. What enhancements to military readiness through modeling and simulation efforts has Joint Forces Command played a role in?

General LAYFIELD. USJFCOM has enhanced and sustained readiness levels at all of the combatant commands, across several service training programs, and with many of our multinational partners through the use of its unique modeling and simulation capabilities. We have enabled joint training across the DOD through the development of a globally distributed Joint training environment, integrating Service and combatant command training sites, facilities and systems. By accurately portraying a joint operating environment, USJFCOM has provided a realistic synthetic playing field from which training audiences can analyze options, train on specific tasks, sustain readiness on critical skills and be better prepared as a whole for the operations of tomorrow. We do this by conducting intense, high quality training today. There is a direct correlation from the modeling and simulation development efforts led by USJFCOM to enhancements in military readiness.

The Geospatial Analysis and Planning Support (GAPS) Toolkit is a collection of capabilities developed through experimentation by USJFCOM Joint Urban Operations Office (JUOO) and JCD&E (J9), which models sensor coverage and improves sensor placement for infiltration analysis in border regions. The GAPS toolkit was initiated as a response to Commander USCENTCOM's request for assistance in Pakistan-Afghanistan border Intelligence, Surveillance and Reconnaissance (ISR) planning. GAPS toolkit and training provides operational units in Operation Iraqi Freedom and Operation Enduring Freedom with sensor visibility analysis, pathfinder analysis and other optimization capabilities. In September 2009, U.S. Forces-Afghanistan requested our continued support to GAPS toolkit for combat deployed units. After Action Reviews with the 82nd Airborne Division and Joint Improvised

Explosive Device Defeat Organization (JIEDDO) highlighted GAPS utility to the warfighter.

Some additional highlights regarding VCAT and SGST use and advancements include:

USJFCOM JKO Enabling the US Army. Partnering with the U.S. Army Training Support Center (ATSC) at Fort Eustis, VA., JKO is assisting the Army in developing one of its top training enablers, the Persistent Learning Capability (PLC). JKO collaboration supports individual training components as the Army attempts to replace resident New Equipment Training (NET) Fielding Teams via online venues. It supports the collective brigade/battalion staff training component by leveraging existing JKO SGST technologies. Additionally, the Army Center of Excellence for Professional Military Ethic (ACPME) is collaborating with JKO focusing on developing a truly Web-based immersive ethics training simulator. ACPME plans on leveraging JKO's success with Virtual Cultural Awareness Trainer (VCAT) technologies.

USJFCOM JKO VCAT Support. Personnel deploying to augment HQ CJTF–HOA in 2010 represent the first staff rotation exposed to VCAT prior to initial deployment in theater. JKO Joint management Office provided login and access information to Commander, 2nd Fleet staff, hosting the individual augmentation replacements, as well as to members of the HOA core staff replacement group. Approximately 47 personnel took the VCAT course, including five core staff members of varying ranks and billets. The overall reaction was extremely positive. Those surveyed judged VCAT as much superior to the cultural awareness provided by any of the other courses taught in their training program (including an instructor-led cultural awareness briefing). Recipients were especially impressed with the videos presented in the course. VCAT scenarios are also being developed for USCENTCOM (Afghanistan), USAFRICOM (North Africa), USSOUTHCOM (Andean Ridge region).

SGST Scenario Development. Since its operational availability in 2009, JKO has received several requests for scenario simulations in response to specific Combatant Command training requirements, including U.S. Transportation Command (USTRANSCOM) Humanitarian Assistance/Disaster Relief Environment Exercise; JIEDDO Joint Training Counter-Improvised Explosive Device Operations Integration Center Afghanistan, USSOUTHCOM Pandemic Flu and Humanitarian Assistance and USJFCOM Special Operations Command procedures scenarios.

○